# RADIO SERVICE SHORT CUTS

# FOR NEW TEST REQUIREMENTS OF

# *Frequency Modulation*

1. F.M. assigned channels 40 to 44 mc — band width 100-200 kc.
2. F.M intermediate frequencies 2 to 5 mc — each stage aligned at exactly the same point.
3. Checking limiter and discriminator circuits

WESTON Model 787
U.H.F. Oscillator

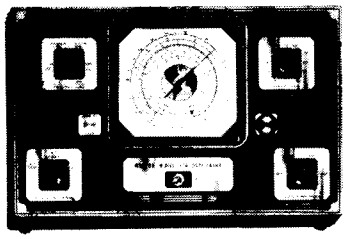

WESTON Model 776
direct-reading Oscillator

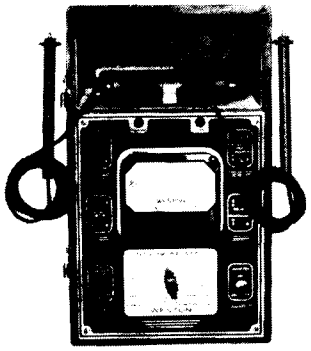

WESTON Model 772
Super-Sensitive Analyzer

## HERE ARE THE ANSWERS:

**1.** The WESTON Model 787 is the only service Oscillator which reads 40 kc. per division at 40 mc. This precise tuning is absolutely essential to test the band width of F.M. receivers. Each instrument is individually hand calibrated at 2 mc. intervals. (The broad frequency coverage of Model 787... from 22 to 150 mc. fundamental frequencies... safeguards against obsolescence in the event of changes in assigned channels.)

**2.** The WESTON Model 776 Oscillator supplies an absolutely stable signal source. Laboratory tests have shown that the frequency drift is less than .05% at 5 mc. for an operation period of several hours. This stability is the result of newly improved control circuits. With Model 776, too, an individually hand calibrated scale insures dependable accuracy over its entire frequency range of from 50 kc. to 33 mc., fundamental frequencies.

**3.** Because of frequency limitations of present visual aligning equipment, current measurements down to 1 microampere offer the only means of checking I.F. alignments, cut-off point on limiter tube, and adjustment of discriminators. WESTON Model 772 Super-Sensitive Analyzer offers all ranges necessary to make these sensitive measurements; *plus* additional ranges for all customary voltage, current and resistance measurement needs.

*Full particulars on the above instruments are available in bulletin form, and will gladly be sent on request. Weston Electrical Instrument Corporation, 581 Frelinghuysen Avenue, Newark, New Jersey.*

**WESTON** *Instruments*

RADIO and Television RETAILING'S

# *Service Short Cuts*

1940 Edition of "Tricks of the Trade"
- - Enlarged, Revised, Renamed

Practical "bread and butter" tips for radio dealers and servicemen on how to find and repair the most common troubles peculiar to specific models of receivers

plus

Reference Charts of Permanent Value and Use

●

THIS manual might properly be named MONEY MAKING SHORT CUTS for the radio dealer and serviceman. It has a wealth of new material including all recently-compiled troubles and cures, all arranged for quick reference.

Even though you have a previous edition, you will need this new one. It covers the makes and models that you are most likely to work upon. You will find it invaluable and indispensable. Discard the old one and put this new one to work . . . at once.

●

published by

**RADIO and Television RETAILING**

330 West 42nd Street New York City

COPYRIGHT 1940

# *Why* GOOD SERVICE CAN'T BE CHEAP

## The Simplest Repair, On the Smallest Radio, Requires:

### CONTINUAL STUDY

Good servicemen know the engineering principles of your set. They spend at least 1 hour a day reading technical magazines and books

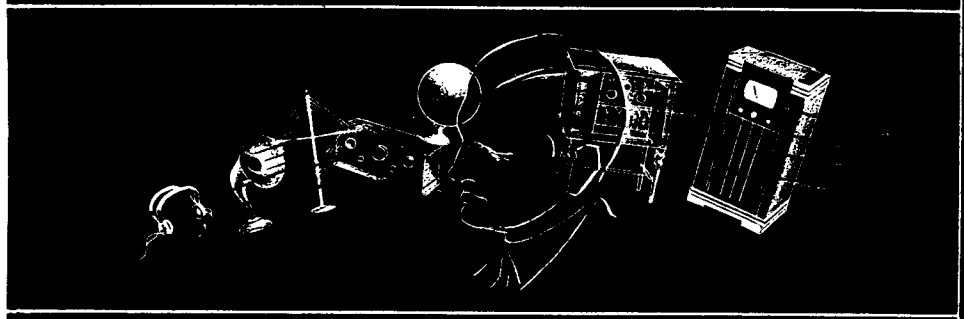

### LONG EXPERIENCE

Good servicemen have a practical knowledge of other receivers like yours. The average has been in business 7 years

### ADEQUATE STOCK

Good servicemen keep a costly supply of standard parts on their shelves. Thus they may render quick as well as reliable service

### MANY DIAGRAMS

Good servicemen maintain manuals containing 8300 or more individual data-sheets so that they may know each intricate detail of every manufactured receiver

### TEST EQUIPMENT

Good servicemen have $200 or more invested in delicate measuring instruments necessary for accurate diagnosis of trouble. They improve and replace this equipment frequently

Well-Trained and Well-Equipped Servicemen Fix Radios So They Stay Fixed . . . . . Saving You Time, Trouble and Money

**RADIO RETAILING**

# What Will It Cost to FIX It . . . ?

**Don't ask a radio serviceman this question and demand an immediate answer unless you are willing to accept a rough and probably high "blanket" estimate**

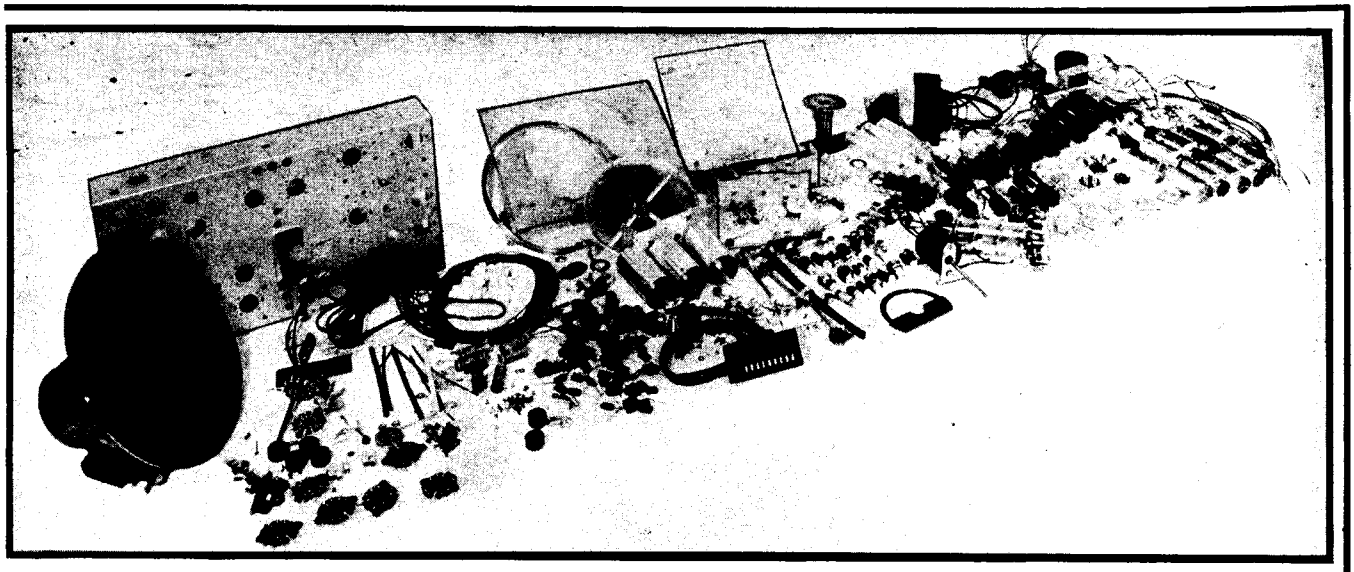

RADIO is the MOST COMPLICATED Mechanism Used in the HOME Today

## Why "Snap Judgment" Pricing Should Be Avoided

1. Few radio troubles can be accurately diagnosed even by expert technicians after merely listening to a set play
2. Conditions in the home, or on the sales counter, are not conducive to the calm, careful thought so essential in this work
3. Even where one component part has obviously failed other parts more difficult to find may have caused this failure
4. "Intermittent" troubles, most difficult of all to find, sometimes require that the set be played for hours before they develop

RADIO *and Television* RETAILING

**MOST ECONOMICAL REPAIR ESTIMATES are Made by Reliable Servicemen After *Thorough* Examination and Modern Instrument Checkup *In the SHOP***

# Why GOOD SERVICEMEN CHARGE FOR INSPECTION*

**It Often Takes Longer To Find The Trouble In A Radio Than It Does To Fix It**

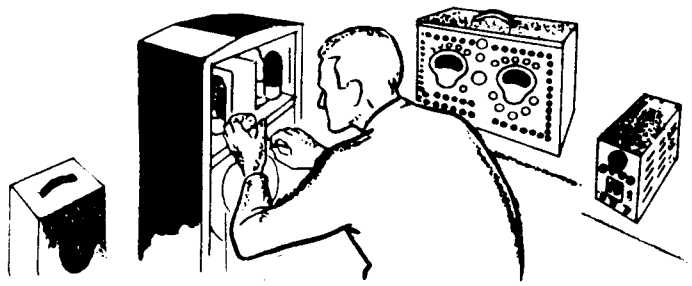

## ACCURATE ESTIMATES

Paid for his time and gasoline, the repairman can afford to make a complete, careful circuit-check, rendering a low, accurate estimate rather than one padded to cover possible oversights

## NO FORCED SELLING

It is unnecessary for the servicer receiving such a cost-covering fee to rely upon his ability to sell the customer merchandise or work not actually needed in order to make a living

## REDUCES REPAIR BILLS

Elimination of "free" diagnosis prevents unscrupulous customers from running up overhead by securing expert advice, using this to obtain repairs elsewhere at cut prices

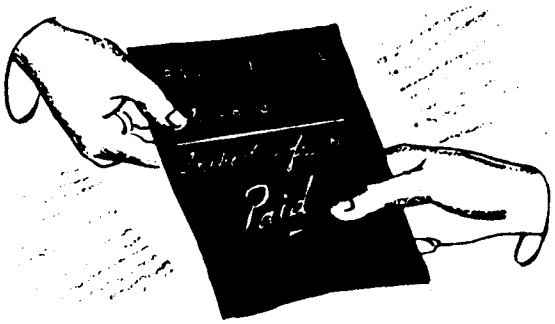


## NO OBLIGATION

If, on receipt of the paid servicer's diagnosis, the customer prefers to postpone repair, he need not feel obligated to the technician as this advice has been paid for

*The inspection fee is cancelled if a charge is made for repairs.

**Time is Money to the Technician, Who Cannot Give It Away and Remain in Business**

RADIO RETAILING

# *Why*
# Cheap SERVICE *Does NOT Pay*

**A good radio repairman, servicing *the most complicated household appliance* must be . . .**

## Experienced MECHANIC

The average reliable technician has seen troubles like yours for the past eight years, can usually put his finger on its source without unnecessarily disturbing critical circuits elsewhere in the receiver

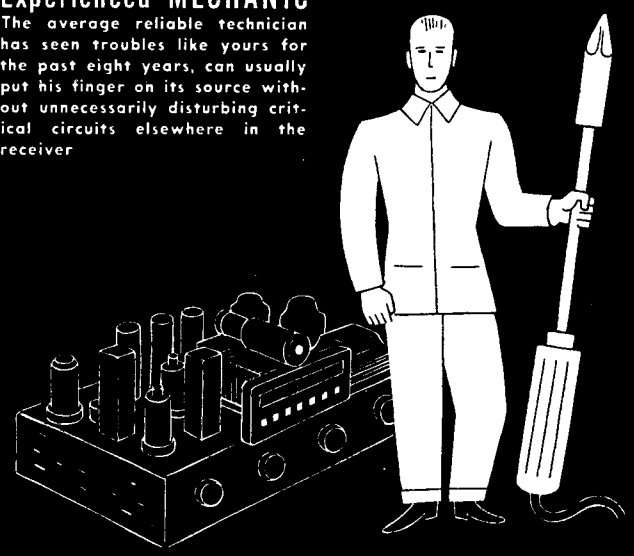

## Practical ENGINEER

Of even greater importance is the expert's thorough understanding of basic electrical principles for this enables him to correct faults without employing brute-force methods apt to cause later difficulty

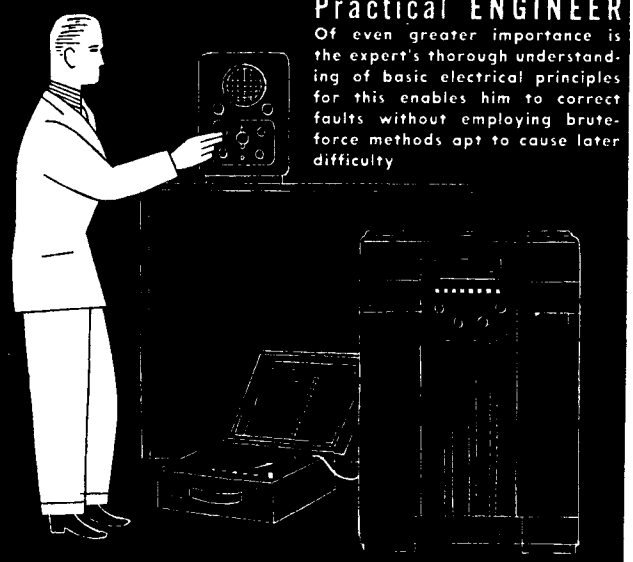

## Perpetual STUDENT

At least one hour a day is spent by topknotchers studying not only new circuits but also new methods of adjustment and tune-up which spell better, longer-lasting radio repairs for wisely critical customers

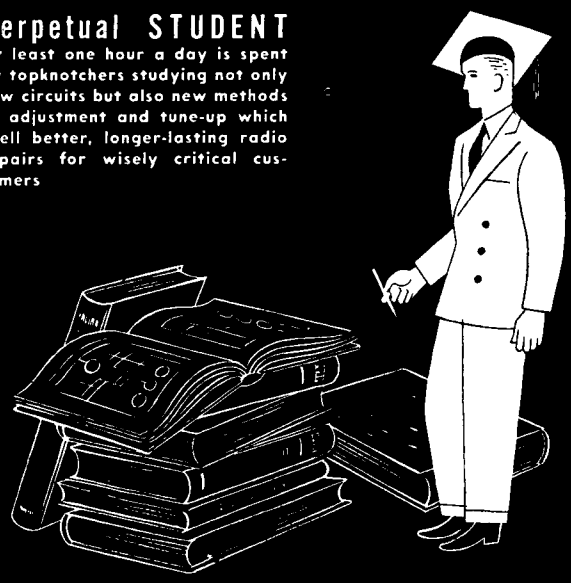

## Efficient STOREKEEPER

Overhead is necessarily high when a man maintains test equipment comparable to a doctor's X-Ray costing $200 or more and often replaced, manuals containing 10,000 or more circuits and a stock of standard parts

**"Screwdriver" handymen with headquarters "in their hat" *naturally* ask less because their tinkering is *worth* less.**

**Your *delicately adjusted* radio deserves the care that *only* a thoroughly experienced, *well-equipped* specialist who commands a *reasonable* fee can give it.**

RADIO *and Television* RETAILING

## AC-DC SETS

### HUM IN AC/DC SETS

When abnormally high hum modulation is present in a-c/d-c receivers, it is suggested that the heater of the pentagrid converter be located as near chassis potential as possible. In several cases where this condition was investigated, hum modulation was reduced considerably by rearranging heater connections in such a manner that the heater of the pentagrid converter was second from the chassis. The heater of the first a-f tube was located at chassis potential in order to reduce hum introduced in the grid circuit of this tube.

### AC-DC MIDGETS

Oscillation . . . Most oscillation troubles in this type set can be reduced by slightly increasing the bypass from detector plate to chassis. The tone is usually improved by this change.

### A.C. SETS

Occasionally an old set turns up that, even after a new filter is installed, hums badly. In most cases it will be found that these sets have the speaker in the negative lead. Miscellaneous bias voltages are taken from the voltage drop across the field. Additional filtering at this network is of little value.

An effective cure is to remove the field from its original position and connect in the B+ lead, as shown in the diagram. An 8 mfd condenser, each side of the field will then be sufficient to remove all hum.

The disadvantage of this system is that another bias network must be devised. This may be accomplished by grounding the B— lead through a resistance of a few hundred ohms. The exact value of the resistance depends on the total current drawn by the set and the amount of bias voltage required.

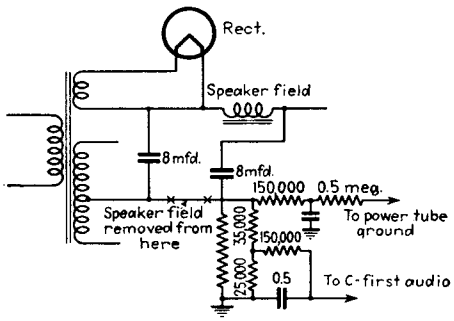


### AC-DC SET

The older models of this type often give trouble at the connections of the high-wattage dropping resistor. To prevent the leads from working loose due to heat, bolt the lead securely.

### AC-DC SETS

Considerable increase in sensitivity results when the antenna coil is moved up closer to the secondary winding. Of course this means readjusting the balancing condenser on the first section of the tuning gang.

## ACRATONE

### ACRATONE 2

No reception . . . due to the shallow sub-base of chassis, parts mounted close together frequently short to one another. Inspect first for this trouble.

### ACRATONE 9A

Oscillation . . . turn second r.f. coil at right angles to antenna coil or visa versa.

## ADMIRAL

### ADMIRAL BA41

Dead . . . Check for shorted .01 mfd condenser in power pack can connected from one side of vibrator prong to ground.

### ADMIRAL AM 787, AM 488

Dial drive belt slips off guide pulleys . . . remove flywheel from shaft, tin exposed sides of guide pulleys, solder $\frac{3}{4}$ in. washer to each side of pulleys. Washer is made from 1/32 in. copper or brass with $\frac{1}{4}$ in. hole drilled in center.

## AIR CASTLE

### AIR CASTLE

Dead on part of dial. . . . Replaces 6D8G converter with 6A8G.

### AIR CASTLE ALL WAVE

Oscillator tube cuts on and off intermittently. Changing the tube, grid condenser, resistor did not cure the trouble. Check the tuning condenser for leakage in the oscillator section. If a resistance reading is obtained replace the condenser.

## AIR KING

### AIR KING 909

Turntable slips . . . replace rubber washer between turntable and motor. This gets oil soaked from motor.

## AIR LINE

**AIRLINE BATTERY 5.** Improving sensitivity and tone . . . Replace detector 34, unshielded, at rear of chassis, with a 32 connecting the grid return directly to minus C9 volts. (Brown lead.) This eliminates the 1 meg resistor in this lead. The grid lead is originally connected to the plus filament.

**AIRLINE 05BA.** Oscillation after several months of use . . . Substitute .01 condenser for .002 detector plate capacitor. If still troublesome connect another .01 from choke coil to chassis.

### AIRLINE 33

Intermittent. . . . Weak contact spring on back of three gang condenser permits end-play in rotor.

**AIRLINE 40, 40A.** Whistle near 800 kc. . . . Replace oscillator grid leak with 40,000 ohms. A lower resistance causes cutoff near 1,400 and a higher value is the cause of the original trouble at 800.

### AIRLINE 40

Intermittent . . . open half megohm resistor in plate circuit of 24 avc tube. Replace with new unit.

**AIRLINE 62-22.** Distortion and overloading on locals, receives dx ok, a.v.c. plate voltage somewhat high when first turned on . . . Look for open circuited resistor between oscillator and r.f. screens to plate of a.v.c. tube, also look for open in "localizer." It sometimes lets go on the cathode side of the control. The divider should be 4,300 ohms overall, tapped at 1,100. Tests should be made to cathode instead of from suspected point to ground. Fading, intermittent reception . . . Check for open cathode bypass condenser in i.f. stage.

### AIRLINE 62-425

Hum, no reception . . . open section in dual 8 mfd. electrolytic condenser in cylindrical container atop chassis. Use common positive type replacement.

**AIRLINE 62-68.** Intermittent reception . . . Due to periodic opening of 3,200 ohm candohm resistor furnishing cathode and suppressor grid bias to the 57 first detector-oscillator. Replace with 1 watt unit.

### AIRLINE 62-72

Dead, no voltage on screens. . . . Open field coil, screen voltage supplied through field. As this set has two speakers it may be made to operate by bridging field (red and yellow wires) with 10 watt 10,000 ohm resistor.

**AIRLINE 62-76.** To improve bass response and avoid overloading of paralleled 47's . . . Change resistor in plate circuit of 57 first a.f. stage from 50,000 to 25,000 ohms. This will probably make set screech when volume is full on and tone control is in treble position, so shunt a condenser of from .005 to .01 capacity (a .006 is usually best) from the variable arm of the manual tone control potentiometer to the high potential end of this same potentiometer.

### AIRLINE 62-70, 62-72

Intermittent fading . . . Replace .04 coupling condenser between 56 detector and 47.

**AIRLINE 62-89**

Insensitive . . . Last i.f. transformer defective. Replace with part #P5127; other transformers unsatisfactory.

**AIRLINE 62-99**

Inoperative . . . poor 32 oscillator tube. Try several tubes. A slight readjustment of plate and screen voltages is sometimes helpful.

**AIRLINE 62-103**

Weak, low volume . . . shorted or open screen bypass or open screen resistor. Inoperative . . . open 415 ohm flexible wire-wound resistor, shorted screen bypass on 6D6 r.f. and det. stages.

**AIRLINE 62-134**

Intermittent high pitched whistling . . . . defective oscillator grid leak. This is a 100,000 ohm resistor.

**AIRLINE 62-149**

Distortion . . . usually caused by i.f. oscillation. Adjust i.f. trimmer for sensitivity and stability rather than any specific frequency. Shielding grid leads on 32 and 34 tubes may prove beneficial.

Generally better results are obtained when the 34 second detector is replaced by a 32 or 1B4. When this is done the "C" bias applied to the detector should be reduced to 6 volts.

**AIRLINE 62, 123, 131, 133, 142, 144.** Failure to operate when new and in use only a short time . . . . Most likely trouble is defective two-section armored wire-wound resistor. Replace with a 1-watt, 25,000-ohm and a 2-watt, 16,000-ohm type. (I.F. 456 kc.)

**AIRLINE 62-177**

Dead . . . check for shorted .01 mfd. coupling condenser between 6B7 plate and 6F6 grid.

Loud volume with double hump resonance curve . . . replace 300,000 ohm resistor between screen grid of 6F6 and 6B7 tube.

**AIRLINE 62-293**

Intermittent . . . . replace black and white striped wire connected between terminal 8 of the 6C5 nearest front of set and terminal of band switch.

**AIRLINE 62-254**

Intermittent, "B" batteries discharge rapidly . . . . inspect speaker leads for short to frame. Unsolder leads and cover with spaghetti tubing.

**AIRLINE 62-307**

Intermittent, noisy . . . replace 1 meg volume control part #101-46. Oscillator dead . . . replace mica condenser from grid of 6C5 oscillator to coil terminal.


# "What Are Rider Manuals? Let Me Tell You . . ."

"BACK in the early days of simple regenerative sets there was no need for Rider Manuals. But when reflex circuits, stabilized T.F.R. stages, superhets and compact construction appeared, the serviceman needed more than just a diagram to do profitable work. Then, as today, he needed the *complete* servicing information that only Rider Manuals could give him. He needed complete and dependable data on alignment, I-F peaks, parts lists and parts values, voltage ratings of condensers, wattage ratings of resistors, coil resistance data, and all the other information which is vital if you are to know just what the manufacturer put in that receiver. Nowhere else can you find *all in one place* the essential servicing information contained in the eleven volumes of Rider Manuals. Nowhere else can you so easily and so quickly find just what you need. Take the index — it's separate —and even cross-indexed so you can find things faster.

"I'm telling you, there never was a service that compared in completeness, clearness and value with Rider Manuals. And, with the complicated sets they're turning out today, there never was a time when they were so—just plain necessary. Proof is that you will find practically every successful serviceman in the country has a complete set of Rider Manuals. Take my advice—don't try to 'get by' with just a few of them. Get them all. Remember, having the information you'll do better work—do it faster—and make more money."

**YOU NEED ALL RIDER MANUALS**

| Volume | Price | Covering |
|---|---|---|
| XI | $10.00 | up to May'40 |
| X | $10.00 | 1939-40 |
| IX | 10.00 | 1938-39 |
| VIII | 10.00 | 1937-38 |
| VII | 10.00 | 1936-37 |
| VI | 7.50 | 1935-36 |
| V | 7.50 | 1934-35 |
| IV | 7.50 | 1933-34 |
| III | 7.50 | 1932-33 |
| II | 7.50 | 1931-32 |
| I | 7.50 | 1920-31 |

**JOHN F. RIDER, PUBLISHER, Inc.**
404 FOURTH AVENUE, NEW YORK CITY
Export Division: Rocke-International Elec. Corp., 100 Varick St., N. Y. C. · Cable: ARLAB

**AIRLINE 62-2126**

Dead . . . . open secondary of antenna coil. Coil must be removed to find trouble.

**AIRLINE 64.** Inoperative tuning meter and weak signals. Place finger on control grid cap of first r.f. 58. If volume increases meter is burned out. It may be shorted without affecting set operation until a replacement can be obtained.

**AIRLINE 77-95.** Poor tone quality noted after replacing defective 19 tube . . . Change bias from 6 to 4½. If in cable disconnect from 6 volt pin and connect to 4½ volt pin. Static-like noise . . . Replace push-pull input transformer. IF: 175.

**AIRLINE 182**

Power transformer heats badly after a few minutes operation . . . filament leads to various tubes are twisted together and bunched close to chassis, sometimes shorting to it. To test unsolder centertap of filament winding from ground and check continuity. Any reading indicates a short.

**AIRLINE 198**

Inoperative . . . open .1 mfd condenser connected between wave band switch and first lug (from front of set) on rack of three trimmers mounted on coil assembly.

**AIRLINE 203**

Dead. . . . Test the condenser and resistor located behind the volume control. Replaces resistor with 500 ohm 1 watt unit and condenser with .25 mfd 400 volt type.

**AIRLINE 209**

Erratic operation, sometimes dead on s.w. bands . . . clean band switch contacts with carbon tetrachloride.

**AIRLINE 211**

Distortion. . . . Replaces defective resistor in plate circuit of 34 detector with 40,000 ohm unit.

**AIRLINE 225**

Intermittent distortion after several hours of operation . . . check for warping of voice coil.

**AIRLINE 320**

Distortion at low volume . . . change the .5 meg second detector screen resistor (R5) to .7 meg.

**AIRLINE 403**

Distortion . . . check 15 mmf i.f. coupling condensers for change in capacity.

**AIRLINE 504**

Inoperative at low frequency end of dial . . . change oscillator grid leak from 20,000 to 50,000 ohms.

**AIRLINE Alexander.** If you can't align check center-tap resistor of 2½-volt winding. It should be 150-ohms but sometimes changes value enough to cause oscillation.

**AIRLINE, GULBRANSEN 9.** Severe cases of oscillation are curable by removing the gang-condenser rotor-rod, sandpapering it where it contacts the frame, sandpapering spring contacts and adjusting screw.

**AIRLINE T.R.F.**

Poor tone . . . connect a 10,000 ohm resistor across primary of p.p. input. Also .02 mfd from plate terminal of primary to one side of secondary.

**AIRLINE 1955**

Intermittent . . . replace .01 mfd. coupling condenser between oscillator plate and grid. This condition can be checked by testing for oscillator signal.

**AIRLINE.** Fluctuating filament voltages in older models using 26's, or failure of r.f. tubes to light at all. Caused by loosening of riveted junction between binding posts and power transformer lead soldering lugs, due to shrinkage of mounting strip. Remove transformer and flood riveted junction with solder. Some local-distance switches test all right on 110 volts but fail to make contact when in actual use. Clean hardened flux or grease from contacts.

## APEX

**APEX 8A, 10.** Distortion, after set has played for about 30 minutes, 47 grid gets red . . . Caused by open 47 filament center-tap. Usually it is just an intermittent open. Sudden increase in volume, or decrease, when nearby light is turned on . . . Generally caused by an open .5 mfd. condenser connected between r.f. cathode and grid return of r.f. and i.f. coils. Replace with 400 volt unit

**APEX 7**

Intermittent on low frequency end of dial . . . check filter condensers for decreased capacity.

**APEX 7**

Live sound when antenna post is touched but no reception. . . . Check 20,000 ohm second detector bias resistor. A similar condition may be caused by 1,800 ohm section of bleeder resistor.

**APEX 10**

Inoperative, normal with 27 a.v.c. tube out of socket . . . replace 1800 ohm section of Candohm resistor at rear of chassis.

**APEX 26**

High screen voltage on detector tube . . . . replace 2640 ohm section of armored resistor with 2,500 ohm 10 watt wire wound resistor.

**APEX 26**

No reception, smoke from transformer . . . unit itself perhaps not at fault. Cause is sometimes faulty insulation on wires in cord-bound cable. To check this, remove chassis from cabinet and turn chassis upside down. Switch receiver on and at same time watch cable closely: there will likely be a spark or flash noted at point where wires are shorting.

**APEX 26**

No r.f. screen volts. . . . Check black wire at speaker for voltage; no voltage indicates open tap on speaker field. To repair: tap screen voltage through a 1 watt resistor from the red lead that feeds the r.f. transformer. Screen voltage should read about 80 volts after repair.

**APEX 27.** Intermittent oscillation. Increase the r.f. by-pass condenser from ½ to 1 mfd.

**APEX 27, 27P**

Part subject to breakdown . . . long Candohm resistor at inside rear of chassis. Ohmage of sections beginning with that fed from filter choke: 4,700, 8,400 and 10,700 ohms.

**APEX 31**

Rumbling noise when set is jarred . . . tighten the r.f. chokes located inside the r.f. coils by cementing with an acetate base cement or jamming with a toothpick.

**APEX 32**

Fading, intermittent howling. . . . Flat bypass condenser can containing 6 condensers has poor ground connection. Can is common, solder can to tube shields.

**APEX 36**

Normal or excessive volume at high end of dial, weak on other end . . . replace open antenna choke and realign set.

**APEX 46.** Distortion on low volume after tubes are replaced . . . Remove old volume control, which is simply a cathode resistor in the 24 circuits, and replace with 10,000 ohm tapered unit, connecting one side to antenna lead, center arm to ground or chassis, other terminal to cathodes of 24's through 250 ohm fixed resistor. Break in wire wound resistor where old control was connected should be closed with jumper.

**APEX 41, 42** Oscillation over entire scale. Try 2,000 ohm resistor in second r.f. grid lead.

### APEX 46

Distortion at low volume. . . . This trouble can be overcome by replacing the old control and connecting in a slightly different fashion. The old control is simply a series resistor in the cathode circuits of the 24 tubes. For proper replacement connect one end of a 10,000 ohm tapered control to the antenna lead, the other end to the cathodes of the 24s through a 250 ohm resistor. The center arm should be connected to ground. The open circuit in the wire wound resistor where the old control was connected should be bridged with a jumper.

**APEX 46, 47, 48.** When these models lack volume screw a small piece of tin under stator supports of tuning condensers. Tune as trimmers by raising up or down. No plate voltage on one 45 indicates blown audio choke. It may be shunted with no appreciable change in tone. Smoke from power transformer, set dead. Unsolder rectifier leads and run them through spaghetti. Resolder.

### APEX 9B

Weak . . . inspect dial light socket for partial short. This lowers filament voltage, resulting in poor reception.

## ARBORPHONE

### ARBORPHONE 45

Noisy when set is jarred . . . Check cap of 1300 ohm resistor in resistor block next to 80 socket.

## ARVIN

### ARVIN 5 TUBE A.C.-D.C.

Regenerative . . . suspect leaky mica condenser from B minus to a.c. line at switch.

### ARVIN MODEL 6

Serial 85001 to 86001. Oscillation between 1100 and 1500 kv . . . this condition may be remedied by placing a 20,000 ohm ¼ watt resistor in the B plus lead to the oscillator. Also, connect a .002 mfd condenser from the B plus lug of the oscillator coil to ground.

**ARVIN 7, 17, 27, 37.** Intermittent oscillation or motor-boating . . . Replace twin a.v.c. condenser located between the 78 socket and the antenna coil. In the model 7 the condenser is located between the 6F7 socket and the antenna coil.

**ARVIN 10A.** Bad howl when set is very cold . . . Reverse reflexed audio transformer primary leads. Bad howl at any time . . . Replace 12 mike, 25 volt electrolytic condenser. Bad hum after replacing 84 tube . . . Put metal shield over tube and ground.

### ARVIN 17

Hum . . . Replace original 12-4 mfd electrolytic filter with a triple 8 mfd section. This can be obtained in one can to fit in the original mounting. Connect two 8 mfd sections to cathode of 84. The other section should go to connection from which original 4 mfd unit was removed.

### ARVIN 10A

Intermittent . . . Check brown lead on if transformers for poor contact.

### ARVIN 17

No reception on low frequency end of dial . . . Replace 40,000 ohm resistor in series with oscillator screen.

**ARVIN 17, 27.** Oscillation while tuning . . . Condensers No. 17-4731 and No. 17-4712 may be making poor ground contact through metal collar to chassis. Replace with new type No. 17-14020 and No. 17-14007 equipped with separate ground leads. Ignition noise . . . See that cables are grounded. Some came through without lugs.

### ARVIN 18

Distortion, low volume when jarred . . . replace .05 mfd. 160 volt condenser mounted through chassis near power pack, connected between volume control and resistor on end of i.f. transformer. This is part C-60 in the schematic.

### ARVIN 19, 29, 39 AUTO RADIO

Raspy noise when dialing . . . remove ground finger springs at each end of gang condenser rotor and replace with new type of heavier construction.

**ARVIN 20A, 30A.** No reception although set sounds alive . . . Inspect r.f. chassis unit and if tube heaters are not lit repair broken "A" choke in audio unit. Tubes in r.f. chassis light but vibrator is not heard . . . Check same choke for break at opposite end. Set overloads on powerful local signal . . . Replace 75 with 85, which will cut sensitivity somewhat but give better tone.

### AUDIOLA 23-S-10

Neon tuning indicator dead . . . check the 10,000 ohm resistor and 1 mfd condenser connected in this circuit.

**ARVIN 25.** Set completely dead . . . Check for shorted tone control. This is a tapped condenser type. Intermittent reception . . . Replace dual .015 mfd. antenna coupling condenser. No reception, vibrator sounds weak . . . Check for shorted dual .02 condenser used as a buffer across power transformer secondary.

### ARVIN 28

Continually blowing fuses . . . examine vibrator for sticking points.

Alfred A. Ghirardi AND HIS BIG 2 OF Radio SERVICE WORK

MODERN Radio SERVICING

Methods and Practice

Here is the famous Ghirardi training course in practical radio service work complete in this 1300-page book. It's an illustrated "gold mine" of servicing knowledge, starting with a complete 420-page treatment of servicing instruments and continuing with nearly 900 more pages of a complete step-by-step procedure course in trouble-shooting, testing, aligning and repairing all makes of sets—all based on practical experience. Here's what you learn:

- Test Equipment—Theory, Descriptions, Diagrams of all Commercial Instruments, How They Work, Construction Data.
- Trouble-Shooting — Newest short-cut methods for trouble-shooting even the most complicated receivers!
- Repairing—Advanced "Factory Methods" for Repairing all parts, explained fully.

$4

1300 PAGES
708 ILLUS.

RADIO Trouble-Shooter's HANDBOOK

Everyday Job Data

Here's a new kind of servicing reference manual, a time-saver for service men—different from anything you've ever seen before. It's chock-full of factory-checked "bench data" that will speed up every service job you do! It's the greatest mass of practical working data ever assembled in one book—

including 3,313 CASE HISTORIES

—of the models and makes of receivers most frequently serviced today. Get the world's biggest Case History collection all assembled and classified for you in Ghirardi's one big handbook. With it you can "lick" every tough servicing job that comes along. For in a few seconds it will show you what all the likely trouble sources are for 3,313 models representing 177 different manufacturers! What's more, it tells you exactly how to repair the set—not with a lot of "theory", but according to the most successful experience of the country's leading servicing organizations. Save trouble-shooting with all its headaches—use this great TIME-SAVER!

More Data, Besides!

I-F Peaks — alignment data for over 15,000 superhets; Auto-Radio installation and servicing data; Noise Elimination; Servicing Home Recorders and Intercommunicators; and 40 more useful data charts and tables.

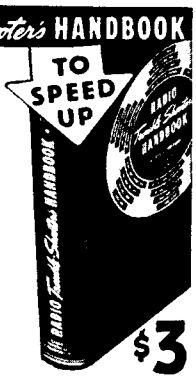


$3

518 PAGES
134 ILLUS.

Standard Manual Size (8½x11), Fabrikoid-bound.

Special Combination Offer: BOTH BOOKS $6.50 (if purchased together). Money-Back Guarantee

RADIO & TECHNICAL PUBLISHING CO.
45 Astor Place, New York. Dept. RR-40

Send for FREE Circulars

Illustrated circulars describing the "Big Two" Combination of Radio Servicing will be gladly sent upon request. Drop us a postcard today!

**ARVIN 35.** Poor tone . . . Replace both .01 mfd. audio coupling condensers with mica moulded types of same value.

**ARVIN 41, 51.** Distortion at low volume control settings, on strong signals . . . Due to overbias of 6F7 grid. Remove 100-ohm resistor from cathode of this tube and connect the cathode to ground through an 800-ohm resistor. The volume control, in other words, should affect bias on the 6A7 only, rather than on this tube and the 6F7 together. The 6F7 should be fixed biased all by itself.

**ARVIN 62**

Noisy when tuning dial is rotated. . . . Solder bottom arm on planetary drive system to bracket at front end of condenser gang.

**ARVIN 81M**

Hum . . . remove p.p. audio input choke from top of chassis and mount underneath. Try rotating at different angles while the set is operating to find lowest hum position.

**ARVIN 618**

Hum. . . . Check for high resistance contact of lug riveted to chassis at 6Q7 socket.

**ARVIN 1237, 1427**

Dead . . . look for shorted moulded bakelite plate bypass in first i.f. transformer. Also replace 1000 ohm plate dropping resistor in this circuit.

**ARVIN 1237-1427**

Too much bass at low setting of volume control . . . remove bass compensating connection on volume control. This consists of an 18,000 ohm resistor in series with a .03 mfd condenser.

**ARVIN 1427**

Bad frequency drift . .. check the lower padder condenser strip. If of the bakelite base type, replace with one of porcelain.

**ARVIN 1427**

Station shift on push-buttons . . . replace original fibre oscillator trimmer strip with new type isolantite type. Seal trimmers after adjusting.

**ARVIN AUTO RADIOS**

Ignition interference . . . In most cases this is caused by chassis pickup. It can be overcome by removing the front cover and cleaning the surface of the joints with fine sandpaper to provide greater area of metallic contact. Also check the acoustinator plug to see that a good ground contact is obtained.

On the model 65, check the right hand breather screen for ground. Spotting it with solder to the housing is sufficient to prevent interference from feeding in at this point.

**ARVIN AUTO RADIO**

Mechanical hum . . . . vibrator chatters against chassis. This may be eliminated by removing vibrator and increasing the tension on the vibrator grounding spring cup.

**ARVIN.** Excessive vibrator hum in 1935 models of these car sets . . . Move large yellow "A" wire running from volume control switch to power supply compartment as far as possible from second i.f. coil.

**ARVIN 1937 AUTO RADIOS**

Vibrator hash . . . warm up for 30 minutes then tighten the 4 screws holding the power transformer to chassis. It is important to warm up the set first, otherwise the initial heat will cause the screws to loosen.

**ARVIN 1936 SERIES**

Vibrator hash . . . Make sure chassis is well grounded to firewall and use shakeproof washer. Make sure good ground is obtained for transmission line box. Ground the box to the frame of the car if an under-car antenna is used, or, if a top antenna is used, ground the box to some metal part known to be at the same r.f. potential as the firewall. Remove front cover from set and tighten four screws holding power transformer in place. Wiggle vibrator in socket and make certain that each grounding tooth makes contact with the sides of the vibrator case. Try a condenser in addition to the generator or dome condenser, across the car's A circuit, placing it directly on either terminal of the ammeter or fuse block. Solder a 1½-inch piece of shielding from the 6A7 grid cap tube shield to the frame of the variable condenser. Check to see that transmission line shielding is firmly contacting plugs at both ends.

**ARVIN AUTO SETS**

Noisy . . . check metal braid ground on gang condenser. Often this breaks and causes noise since rotor is insulated from chassis by rubber grommets. Replace ground with longer braid.

Dead . . . oscillator stator lead too short when gang rocks and breaks lead. Lengthen lead slightly, if too long set will not align.

Intense motor noise . . . these sets use matching transformer in aerial lead. Check transformer for short to chassis.

## ATWATER-KENT

**AK 30 SERIES.** Improving sensitivity, selectivity . . . Replace antenna choke with a compensator coil, a center-tapped coil with one end to grid, one to ground and the tap to the antenna post.

**AK 7D, 217D, 427D, 667D.**

Squealing at low volume levels . . . Replace condenser C18 as it has probably developed leakage. Use an 8 mike, 400 volt unit. Sometimes one section of the i.f. transformer T5 will also be found open.

**AK 30, 40.** *A common headache is shorting of the wire-wound resistor beneath the chassis to ground. The fibre base warps, causing the trouble, which can be corrected by sliding a piece of fiber under the unit. No reception: Check the speaker filter condenser.*

**AK 35, 45, 52.** Lack of volume. Drill one eyelet on second r.f. transformer support and turn just far enough out of line to keep set under oscillation at high frequencies.

**AK 37.** Intermittent reception and rasping. Press rear of chassis. If this causes noise insulate shielded antenna cable leading from rear of metal cabinet to front of chassis. It frequently touches the bare ends of the power cable.

**AK 37.** To increase selectivity . . . Mount three-gang trimmer on top of tuning gang and re-balance with these trimmers connected in the circuit. Make sure that the rotor section is well grounded. Stunt also ok on Model 40.

**A. K. 37, 40**

Dead . . . replace 0.3 mfd speaker bypass condenser.

**AK 37, 40**

Installing pilot light in these metal encased sets . . . Remove the metal cover from the powerpack. Connect two wires to the 1½ volt winding, or terminal strip for the 26 tubes. Connect these two wires to a miniature porcelain base socket and use a 2.2 volt bulb. By means of a small metal clamp, the socket may be placed at any point along the front of the set. Just raise the lid and slip the clamp beneath it.

**AK 37, 40.** Oscillation, after replacement of r.f. and detector tubes . . . Bend a piece of brass about 1½ in. square in the form of an "L." Drill a hole through it and bolt it in place between the first and second stage tuning condensers.

**AK 37, 38, 40, 42.** Low power stage plate voltage or none at all . . . Disconnect one speaker lead and plug analyzer into 71A socket. If plate voltage now appears normal replace speaker output condenser.

AK 37 to 60. When dial belts are not obtainable use heavy dial cable. Anchor to pulley-pins, spot with drop of solder. Move condenser to take up slack.

**A.K. 46**

Distortion . . . replace .5 mfd condenser from B plus end of first audio plate resistor. The original condenser is in a pack.

**AK 37-60.** New, double-spring contact arms are available at the factory and make it unnecessary to change entire volume controls unless the wire is shot. Clean the winding with alcohol.

**AK 37, 40, 41, 42, 43, 44, 53, 54, 55, 55C, 60**

Installing volume control strips . . . Connect replacement strip across 110 volt, a. c. line in series with a 75-watt lamp for one minute. This will make the strip pliable so that it can be inserted in the control shell without breakage.

**AK 37, 38, 40, 42.** Wire on flat-strip volume control breaks . . . Remove control, solder break and bend flat strip in opposite to original direction so that contact arm rides on unused surface.

AK 37, 38, 40, 42. Use of a 1 mfd., 400 volt condenser between the filament of the 280 where it connects to the first choke and ground increases pep and reduces hum. Try it next time it is necessary to rip open one of the cans.

**AK 40.** Oscillation during warming up period . . . Shunt the secondary of the first a.f. transformer with a 250,000-ohm resistor.

**AK 40.** When biasing resistor strip under terminal board is defective and original replacements can not be obtained use one 750 and one 3,500-ohm type.

**AK 40.** Fading and low volume, especially where 26's are old . . . Put on additional filament leads from power pack through a hole drilled in side of pack case to filament lugs of first r.f. socket. This will lower drop in leads, raise voltage on 26's and improve performance.

**A-K 40, 42.** Weak reception. May often be pepped up by replacing detector resistor, which is of glass, grid-leak type, with a variable unit taken from an old B-eliminator.

**AK 40, 42.** Excessive hum . . . Look for poor connection between ground terminal under resistance strip in power-pack and wire going through insulating compound into pack.

**AK 40, 42, 44, 46, 53.** To check or replace filter condenser sections . . . Looking from front, panel-side of set, block is at extreme right, next to choke assembly. Three leads connect from block to chokes, blue, yellow and white. Stick a pin into each lead so that it contacts the wire and with an ohmmeter check from pins to ground for short. After locating defective section clip its associated lead close to block, leaving remainder of lead attached to choke assembly. Attach positive side of replacement cartridge type electrolytic to lead and ground negative to chassis.

**AK 55, 60.** Motorboating, all parts in detector and a.f. check ok and all condensers working properly . . . Make careful resistance check of all choke coils in r.f. system. A short of only 2 ohms in just one choke will cause this trouble.

**AK 60C**

(First production with single volume control.) Loses volume after warm up . . . replace 65,000 ohm resistor between B plus and r.f. screens.

**A.K.60**

Inoperative . . . 1050 ohm flat wire-wound resistor located under red and yellow resistor mounting open. Cut lead where it solders to condenser terminals. Replace with 1 watt carbon unit soldered from this condenser to ground.

**AK 60, 60C.** Low plate voltage, noisy reception, little volume . . . Check two a.f. grid resistors. One should be 40,000 ohms, the other 65,000. They have a habit of dropping in value.

**AK 61.** Noisy after about 2,000 hours of use . . . Three filament resistors wound on iron strip commonly overheat, burning insulation and shorting to iron.

**ATWATER KENT 55**

Distortion on locals, even with switch in local position . . . remove low side of volume control lead from cathode at cathode condenser terminal and connect to ground.

**A.K. 55**

Inoperative. . . . Look for a small piece of broken antenna wire wedged in between antenna terminal and chassis.

**AK 55.** Weak and distorted reception . . . Check two resistors across speaker field. Center tap between them goes to center tap of a.f. input transformer secondary. Value of resistors should be 9,500 ohms.

**AK 55C**

Intermittent operation, component parts apparently ok, voltages normal . . . Check secondary of output transformer by temporarily substituting a magnetic speaker. Trouble frequently does not show up on continuity test. Disconnect voice-coil while making this test.

**A.K. 206, 376**

Incorrect dial calibrations at the low frequency end. . . . Readjust broadcast trimmer located at rear of chassis. This adjustment is rather difficult to find on the chassis.


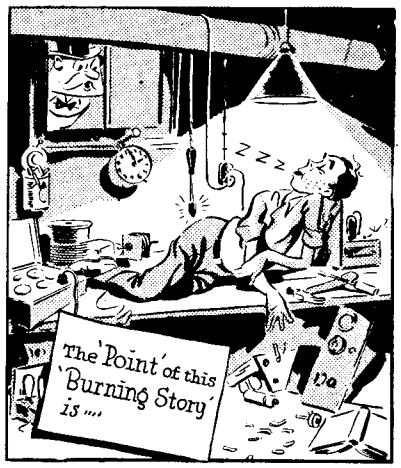


Save TIME WITH CENTRALAB

Servicemen know that with Centralab parts they can do a better replacement job on any and all sets.

So when the going gets tough get in touch with your Centralab jobber at once.

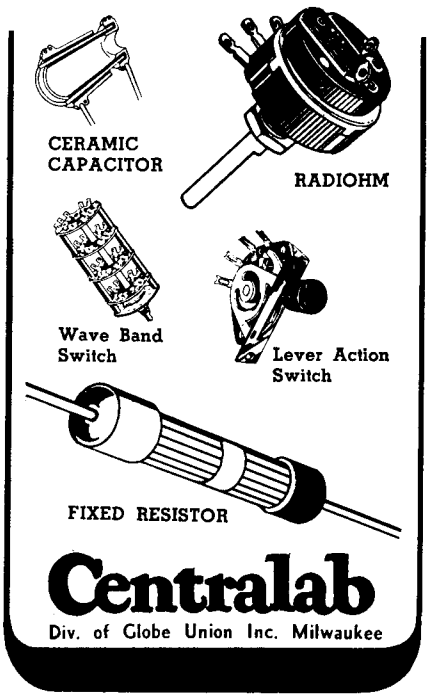

# RADIO RETAILING'S "Service Shortcuts"

**AK 55 (Early).** Intermittent operation after a few minutes of use, reception gradually fading out completely with a buzz . . . Open secondary in second r.f. transformer. Plate lead of 24 comes through this coil and as fault is intermittent it is usually difficult to hit the open period when checking socket voltages. Application of heat from a 60 watt lamp will hasten the opening if this condition exists.

**A-K 55.** Dead, or almost inaudible. Check detector coupling resistor, which frequently fails. Replace with 25,000 ohm unit. Value not critical.

**AK 55, 60.** Fading can often be traced to loose rivets on wire-wound resistors. In most cases re-clamping them with pliers effects a repair. Check particularly bleeder No. 1, r.f. bias and 1st a.f. bias units, as these work loose more often than other units at the rivets.

**AK 55, 60.** Aligning condensers . . . When pulleys are completely disconnected from shaft and condensers aligned replacement of pulleys generally throws the job out again. To overcome this loosen one screw completely and then loosen the other very slightly, just enough to allow the condenser shaft to turn when the pulley is held in place.

**AK 55 TO 67**

Fading, intermittent reception . . . Often due to poor connections at various tubular condensers. Also, resistors are mounted on insulating strips, the connecting lugs being integral parts of these strips. Resistors of metallized variety with solder ends are soldered to rather gingerly by factory to avoid melting and poor connections frequently develop. Test all resistor connections mechanically and electrically, moving them while ohmmeter is attached. Connect ohmmeter prods to lugs rather than to resistors.

**AK 80.** *When volume controls become noisy raise the end of the contact with long-nosed pliers and bend in toward the winding slightly, then clean the strip with alcohol.*

**AK 80 Series.** Hum and distortion not due to condensers or resistors . . . Replace grid resistor in 47 input, also coupling condenser to detector plate.

**AK 80.** Intermittent operation . . . Rub pencil eraser around top of tube sockets before looking elsewhere for trouble. Twisting of tubes on socket in order to find the correct position removes enough solder from the tube prongs to make a high resistance short between socket holes and this is frequently enough to kill the oscilator tube.

**AK 80, 82, 83, 84, 85.** Intermittent whistle near 700 kc. . . . Replace resistor from grid of 27 oscillator to ground with 50,000 ohms.

**AK 82.** Very poor reception, oscillation, cutting in and out of signals . . . Check mica of i.f. stage plate trimmer. It sometimes either rots or carbonizes and leaks badly, later shorting and then opening. The condenser is one of two trimmers on top of the i.f. transformer, completely inclosed in shield can.

**AK 82.** Oscillation . . . Try replacing a.v.c. plate by-pass with a new ½ or ¼ mfd. unit. Intermittent reception . . . Replace screen by-pass condenser.

**AK 83, 85.** Poor tone, low volume and little response with tone control turned to bass. Look for open r.f. choke in pentode control grid circuit. Analyzers miss this one.

**A.K. 84**

Oscillation . . . check 60,000 ohm grid resistor on 27 oscillator for change in value.

**AK 84**

Breaks into oscillation after operating a short time . . . replace 60,000 ohm resistor in the grid circuit of the 27 oscillator.

**AK 84.** Weak reception on strong locals, voltages and current ok . . . . See if excess wax from field coil has worked into armature, freezing voice coil.

**ATWATER KENT 84**

Inoperative . . . shorted oscillator plate tuning condenser at right of chassis.

**AK 84.** Poor volume, or intermittent normal and low volume . . . If all voltages are normal check for an open in the i.f. stopping choke. The leads frequently break under the protective wax where they are soldered to lugs.

**ATWATER KENT 84**

Dead . . . shorted oscillator plate tuning condenser at right of chassis looking from front. Motorboating . . . suspect second detector bias and screen resistor.

**AK 89**

Motorboating around 900 to 1,500 kc. . . . check all chokes in r.f. section for short or open.

**AK 96, 99.** Set dead, neon tuning indicator inoperative, 180 volts on i.f. tube grid. Remove coil shield, i.f. shield, and look at the small grid resistor tucked in near the first detector plate coil. Its insulation frequently breaks down, permitting a short. Wrap it in cardboard or fibre.

**AK 99.** High potential on one control grid cap. Remove i.f. cans, insulate resistors which touch coil forms. Trouble causes neon light to be inoperative and kills all signals.

**AK 145**

Audio squeal, unaffected by touching 2A7 or 58 grid caps but aggravated by touching 2A6 grid cap . . . Unsolder, remove and throw away metal clamp around 2A6 grid lead at point of grounding. Solder the wire twisted around the grid lead to the point at which clamp was soldered. It is impossible to detect this trouble with instruments.

**A.K. 155**

Weak, distortion . . . . replace .5 meg metalized grid return resistor from 42 grid to ground.

**AK 155.** Hum and distortion in these a.c.-d.c. midgets . . . Check dual and triple filter condensers for bad leakage and if it is found replace with 8 mike sections. Also see if volume control has changed value from normal ½ megohm. Before delivering to customer adjust trimmer between tuning condensers and speaker, at top front of chassis, to loudest point.

**A.K. 165**

Weak, oscillation, crosstalk. . . . Look for open bias resistor on 57 mixer. This is a wirewound pigtail type.

**ATWATER KENT 165,185,525**

Oscillation when volume is turned on full . . . replace double 250 mmf condenser with two single bakelite units. This condenser connects from the plate of 58 i.f. to the two diode plates of the 2A6.

**AK 206**

Oscillation from 19 to 20 meters . . . . this may be corrected by moving lead to control grid of 2A7 toward the front of set.

**AK 246.** Bad audio howl as volume control is advanced with tone control in low position . . . Generally due to defective volume control. Replace.

**AK 246.** Set stops playing suddenly . . . Check for poor contact on filter choke, where it connects to plate of first detector 58. The brads that hold the connection on both sides of the coil loosen and corrode.

**A.K. 275**

Bad hum . . . Connect a lead from common ground point to chassis. This set does not use the chassis as a ground return, consequently stray currents picked up in the shields and chassis are carried around to all parts of the circuit.

**ATWATER KENT 317, 337**

Intermittent and weak on low frequency end of dial. . . . Check plate resistor in oscillator circuit of 6A8. If defective replace with 30,000 ohm unit.

**A.K. 317, 337, 637**

No broadcast reception . . . check voltage on oscillator section of 6A8. This should be approximately 185 volts. If lower replace 30,000 ohm plate dropping resistor.

**AK 416-446-136**

Intermittent or weak . . . shorted .1 mfd. condenser (marked No. 102) between 6F6 cathode and .1 meg. resistor, replace.

**A.K. 435**

Dead, constant hum. . . . Check for open .05 mfd. bypass in 6K7 i.f. grid circuit. This condenser is C5 in schematic.

**A.K. 435**

Intermittent noise . . . replace 20,000 ohm 2 watt carbon resistor supplying screens of 6A7 and 6K7.

**AK 465Q.** Distortion, sounds like speaker out of adjustment . . . Caused by an open 8 mike electrolytic connected from B-plus at speaker cord to ground. This open also causes howling at times and is almost always diagnosed at first as speaker trouble.

**AK 469**

**Distortion, weak on low frequency end or fades out . . . replace .00145 mfd. fixed padder located under osc. coil with .001 and a small trimmer and tune same as regular low frequency trimmer; I.F. 130 K.C.**

**ATWATER KENT 480**

Dead on low frequency end . . . check bypass in plate circuit of 58 r.f. for leakage.

**AK 511W TUN-O-MATIC.** Automatic feature won't shut off, tuning condensers swing to 1,600 kc. ok, but line is not cut . . . Look at nine point normal, off, and automatic switch at right on front panel. Switching blades are a little too wide and sometimes contact two points at once, preventing opening of the circuit. File blades down a little or replace with later type switch available from factory. No reception . . . Look for leads soldered to tone control switch touching housing of volume control and grounding out. These two are mounted so close together on front panel that sometimes the rubber insulated pieces on the tone control leads slip off from vibration. Slide them back in place or bend leads back. Hum not due to circuit faults . . . May be due to reversal of antenna and ground. 5Z3 rectifier and 2A3 tubes also seem critical. Change them when looking for hum.

**AK 559**

Motorboating and distortion as volume is increased . . . replace output filter condenser. If 2A5s do not match in emission there will also be motorboating.

**A-K 612.** Distortion on low volume, clear on high volume . . . Due to an open volume control in most cases. Excessive sensitivity (some people object to interference from "honky-tonk" dx) . . . Substitute an 80 for the 83 feeding r.f. stages. Lowering of voltages in this manner does not affect locals.

**ARVIN 618**

Excessive hum . . . ground lug on 6Q7G tube socket is fastened to chassis by rivet that holds socket. Bend lug over and solder direct to chassis. Be sure a good solder connection is made.

**AK 665.** Oscillation . . . See that screen grid stage control lead spring, which serves as a shield, is kept away from the 2A5.

**ATWATER KENT 667**

Heavy bass . . . Improve tone by replacing C12 .02 mfd. on 2A5 to .006 or .01 mfd.

**A.K. 810**

Motorboating and audio howl . . . . check ⅓ watt carbon resistors, connected from plates of 6F6 tubes through .01 mfd condensers to ground. Open 10 mfd electrolytic condenser across bias has caused excessive a.c. to pass through these resistors, causing them to heat and change value. Replace resistors with 1 watt 10,000 ohm units, condenser is 10 mfd at 200 volts.

**A.K. 812**

Erratic operation, noise, intermittent. . . . Broken or loose connection to the .00145 mfd condenser located inside oscillator coil shield.

**AK 812.** Bad tone and blocking when volume is turned up . . . . 500,000 ohm potentiometer connected to diode plate 2 of second detector has changed value to about 1 megohm. Shunt with fixed resistor to restore value to normal. Balancing double-spot tuning trimmer, fourth on 5 gang unit . . . . Set for minimum signal with oscillator running at 1400 and set dial at 1240.

**AK 825**

Hum, especially with advanced volume control . . . leakage between one section of filter block and case. Replace with triple 8 mfd 200 volt.

**ATWATER KENT 944**

Weak, sensitivity control has no effect . . . look for open 1 megohm resistor connected from the 4 mfd. filter to the grid of 57 tube.

**AK. Noisy wire wound volume controls. Clean contact arm and winding with alcohol. Using No. 1 soft lead pencil, fill in spaces between windings at contact edge until surface appears level and smooth.**

**A.K.**

Flat ribbon drives can be replaced with phosphor bronze dial cable. Solder cable to pin on pulley that originally went through belt.

**ATWATER KENT MODEL Q**

Audio howl . . . shunt the secondary of the first a.f. transformer with 100,000 ohms, also the secondary on the push-pull input with 150,000 ohms.

*AK. Volume controls which become noisy need not always be replaced. Remove them from the chassis, swab the winding with a cloth saturated with alcohol, bend the slider arm so that it makes firmer contact with the winding and also tighten it against the tension spring.*

## AUTOMATIC

**AUTOMATIC MODEL B**

Oscillation with volume set at mid-point . . . Control grid lead of 6Q7G too close to 25L6G

## AUTOCRAT

**AUTOCRAT 80**

Low volume . . . leakage between section of dual electrolytic filter condenser shorting speaker field.

## BELMONT

**BELMONT 71C**

Birdies all over dial . . . check 56 oscillator grid leak for increase in value causing oscillator to super-regenerate.

**BELMONT 71C.** Audio frequency modulation of oscillator, audible all over dial . . . Replace 56 grid leak with proper size. It has probably increased in value.

**BELMONT 101**

Distortion, two spot tuning . . . Check leakage .05 condenser in avc lead of r.f. stage. Also .05 cathode to ground condenser on same tube.

**BELMONT 777B**

Improved tone and performance can be had by replacing 180 ohm cathode resistor on 6D6 tubes with 300 ohms.

**BELMONT 778, SERIES B**

Intermittent or dead on low frequency end . . . suspect bakelite condenser across terminal of low frequency trimmer for open.

## BRUNSWICK

**BRUNSWICK AC10.** Weak signal, all voltages ok . . . Voice coils commonly blow.

BRUNSWICK 11, 12, 16, 33

Weak or no reception on low frequency end of dial . . . look for open 910 mmf. condenser located between stator of oscillator tuning condenser and high side of oscillator plate coil.

BRUNSWICK 11, 12, 16, 23

Fading, poor selectivity or sensitivity . . . Tighten screw fastening 10 mmf mica coupling condenser to stator section of first detector condenser.

**BRUNSWICK 11, 12, 16, 17, 18, 24, 25, 33.** Poor volume or entirely inoperative . . . All models use a screen supply resistor of 14,000 ohms, 2 watts, followed by a 1/3 watt, 5,000 ohm unit in the case of the 24 oscillator and another 1/3 watt, 5,000 ohm resistor as a bleeder to ground. These resistors commonly become charred and their values drop to as little as 500 ohms, or they burn out entirely. Replace them with a 15,000 ohm, 2 watt and two 5,000 ohm, ½ or 1 watt. units. No control of volume although control itself tests ok . . . Look for grounded grid returns in r.f., mixer and i.f. stages. These frequently short to hold-down clamps, cutting out a.v.c. and manual control action. (I.F. 175 kc.)

BRUNSWICK 11, 12

Shorted tuning condensers caused by broken porcelain insulators in turret assembly . . use fiber insulators of the same thickness for replacement.

**BRUNSWICK 11, 12, 16, 33, 24, 25.** Dial slips . . . To correct loosen and remove nut above the center of condenser assembly. This permits removal of the planetary dial arm. Loosen the two screws holding the tuning knob, tone control and volume assembly. Place cardboard spacer 1/32 in. thick underneath the assembly and tighten again. Replace planetary dial arm.

**BRUNSWICK S14.** Hum. Look for loose power transformer laminations. Number of laminations in 60-cycle job varies. If line ballast tube glows slightly when everything else checks ok the core is too small.

BRUNSWICK S14

Noise and motorboating . . . replace grid leads from condenser stators to tube grids, increase tension on phono switch blades. Dead. . . . Inspect local distance switch.

BRUNSWICK 15

Noisy, changes volume . . . replace 35,000 ohm screen grid resistor.

**BRUNSWICK 15.** Intermittent reception. Check bypass condenser just behind 45's against back wall of chassis, down inside.

**BRUNSWICK 15. Distortion on all stations, reception otherwise ok. . . . Check detector screen by-pass. This often shorts out without affecting voltage readings enough to notice. Check the condenser with a neon lamp to be sure of it.**

**BRUNSWICK 15.** Full reception when set is first turned on, gradually fading out. Look for open 25,000 ohm orange resistor in screen-grid supply circuit.

BRUNSWICK 15

Oscillation . . . open .1 mfd. condenser across speaker socket. This condenser in condenser pack, green leads.

BRUNSWICK 15

**Squealing . . . Usually due to poor contacts at condenser rotor. Contacts are very inaccessible. Drill a hole sufficiently large to permit insertion of a screwdriver through drum and chassis in line with the contacts.**

BRUNSWICK 15-22

Signals only at high frequency end of dial . . . open primary in second r.f. transformer.

**BRUNSWICK 15, 22.** Noisy or intermittent reception . . . Check .02 mfd. coupling condenser in a.f. circuit and give set thorough mechanical inspection.

**BRUNSWICK 15, 22, 32.** Rushing sound like steam escaping, particularly noticeable on lower end of dial . . . Remove shunt condenser from local-distance, push-pull type switch.

BRUNSWICK 15, 22, 32, 42

Sudden volume changes . . . often due to loose rivet holding antenna post on insulating strip. With local-distance switch in distance position, apply ohmmeter between post and chassis. If meter needle wavers, replace post. Oscillation . . . bond speaker frame to receiver chassis and make sure set has good outside ground.

**BRUNSWICK 15, 22, 42.** Noisy volume controls. Unsolder the pigtail from the second r.f. variable condenser stator, remove the rubber sleeve and blow out the powderlike substance found in it. Wipe powder off pigtail and replace sleeve, resoldering.

**BRUNSWICK.** Noisy and irregular reception in certain models using rubber tube-covered volume controls . . . Caused by dampness. Replace tube with catheter purchased at drug store if duplicate tube is not obtainable.

**BRUNSWICK 16.** No reception, voltages normal . . . Oscillator screen resistor has probably changed value and the tube won't oscillate. Replace with 5,000 ohm ½ watt unit. The original was a ¼ watt size. Distortion, voltages below normal . . . Check same resistor for abnormally low value, practically shorting screen to ground. Inadequate volume . . . Try changing the screen bleeder resistor from 14,000 to 10,000 or 7,500 ohms. Fading or abrupt interruption of reception, voltages normal . . . Check 10 mmf. coupling condenser between r.f. tube and first detector. This is mounted on bottom of one of the turret condensers with a machine screw. The screw loosens and causes trouble.

**BRUNSWICK 17.** No reception . . . Check for grounding of 14,000 ohm screen resistor at right of chassis between two coil shields, also for .5 mfd. condenser in oscillator plate circuit. These are common faults.

**BRUNSWICK 83.** Hum and reduced B voltage. Either shorted 45 C bias resistor or charred braided tubing on push-pull transformer leads to resistor strips, forming high resistance shorts to chassis. Lack of sensitivity. Found principally in sets with serial numbers below 80,000, especially those with brown crackle finish. Voltages check ok. Signal can be built up by reducing screen grid cathode 100 ohm wire wound resistor to 25 or 50 ohms, by heating wax off and reversing r.f. choke and antenna loading coil leads to position of maximum signal strength or, by re-aligning condenser gang. Motor-boating. Caused by open circuit in small .1 mfd. tubular condenser fastened to large ½ mfd. tubular condenser mounted under r.f. section. Open circuited ½ mfd. unit causes oscillation. Well over 50 per cent of trouble in the 83 is due to shorted or grounded pigtailed carbon resistors.

**BRUNSWICK. Where sets having limited output transformer space burn these units out try a G.E. output unit. Melt it out of its can and insert it in the original container.**

## BUICK

**1933 BUICK.** Brake static . . . Cotter pin in front wheels is usually loose. Place a lock washer under each pin to hold them tight.

BUICK 130-4873

Blows fuses . . . insulation on shielded grid lead of 6R7 worn through and contacting filament prong.

## CHEVROLET

**CHEVROLET.** No signals in this auto-radio, all voltages and circuits ok . . . Replace small, blue Sprague .002 condenser across the lower end of the voltage divider.

**BOP CHEVROLET.** Pronounced vibrator buzz . . . Remove 75 tube. If noise stops replace tube and short screwdriver across grid to ground. If buzz continues equally loud place 4 mike condenser across B plus to ground. Trouble is due to opening up of filter output condenser.

**CHEVROLET.** Intermittent spark noise, not traceable to faulty suppression . . . After a year or so in use, especially in 1931 and 1932 models, the beading along the top pulls away where the side beading connects with the beading across the front. Electrically make a good connection between the open ends with a piece of copper braid and ground to the top of the door post on each side of the car. This should be tried when noise disappears with the antenna disconnected, dome light is cut loose and antenna shield is well grounded to the instrument panel bolt.

**CHEVROLET 364441 (1933).** Oscillator dead on all or part of dial . . . First section of candohm strip, 4,200 ohms, .002 condenser across this resistor and tube all ok. Replace oscillator coil even though continuity test reads perfect.

**CHEVROLET 60049.** Severe chassis pickup of noise . . . See if the ground lead is connected to the lighting switch. If so move it to one of the door jamb bolts, or bond the dash to the door jamb bolts and to the fire wall with heavy conductor. The dash is generally a poor ground without this bonding.

**CHEVROLET 601038**

Intermittent . . . replace 30,000 ohm screen grid dropping resistor (R2)

**CHEVROLET 1929, 30, 31, 32.** Obstinate cases of ignition interference . . . Bond the body to the frame, or chassis, at both sides, in the front. Right about at the bulkhead is a good spot to do this. This is particularly effective when the car has run up a lot of mileage. Use a piece of heavy shielding and self-tapping screws both in body and in frame. In extreme cases of noise move the electrolock cable and wire up ignition like later model, with one switch in hot lead.

**CHEVROLET '33.** Noise, when passenger is seated in front . . . Place shield plate of tin beneath floor boards where feet rest and ground.

**1933 CHEVROLET.** Remove ignition coil from bulkhead and fasten to motor using valve inspection plate bolt.

**'33 CHEVROLET.** Noise, disappearing when antenna is disconnected from set . . . Generally picked up by shielded antenna lead which runs behind instrument panel and is frequently in inductive field of cable running from key to coil. Run antenna lead at right angles.

**1933 CHEVROLET.** To completely eliminate generator interference . . . Connect condenser to second field wire of the generator. Stop-light noise . . . Bridge switch with a 1 mfd. condenser, connecting from terminal to terminal instead of from terminal to ground, the usual method.

## CHRYSLER

**CHRYSLER "AIRFLOW."** Failure to find built-in antenna lead . . . It is brought down the right front corner post, as usual, but is then carried several inches farther, down toward the floor inside the post and then brought out. Necessary to remove screws holding leatherette covering post, reaching behind it for wire. Sets are easily mounted on upper part of bulkhead. Care should be taken that mounting bolts do not extend over one-half inch beyond engine side of firewall as this will prevent opening and closing of hood. In most cases no bond between motor block and frame is necessary. Shield antenna lead up to 1 inch within corner post.

**CHRYSLER.** Static discharge due to drag emergency brake on driveshaft, occurring whenever motor is not actually driving the car . . . Mount holder for small carbon brush so that it makes contact with the emergency brake drums, insert a brush and ground the holder.

## CLARION

**CLARION AC 51**

Low volume, low voltage . . . Check 1 mfd. condenser across 900 ohm output bias resistor for short.

**CLARION 60**

Inoperative or noisy . . . check for open in input audio transformer. This is a special transformer and must be replaced with original unit for original tone qualities. Resistance coupling may be substituted.

**CLARION 80**

Inoperative, 260 ohm resistor heating . . . test red lead to bypass condenser block for short.

**CLARION 160**

Intermittent reception . . . Check .00005 mfd mica condenser in the grid circuit of the oscillator.

**CLARION AC-160**

Volume control inoperative . . . Check .35 mfd condenser in plate circuit of second detector. Replace with .1 mfd 600 volt unit.

**CLARION 340**

Cuts off abruptly toward 600 kc. end of dial. Replace 8000 ohm bias resistor on 57 oscillator with 6000.

**CLARION 470**

Distortion, low sensitivity . . . change 5,000 ohm bias resistor on 2A6 to 10,000 ohms.

**CLARION 480**

Weak, distortion, tunalite action poor. . . . Excessive bias on 56 first audio.

## COLONIAL

**COLONIAL 31AC.**

Set dead, no bias on r.f. tubes even though bias resistor checks ok . . . Diagram shows r.f. filament winding in power transformer as being center tapped. Actually, a center tap wire wound resistor is sealed in the transformer case and these open up. Replace with an external 10 or 20 ohm center tapped resistor mounted on transformer terminals.

**COLONIAL 31 DC.** Set plays with switch off. Disconnect ground lead. If set cuts out trouble is shorted condenser in series with this lead. It is one of three capacities at left of chassis when set is turned upside down on bench with back of set forward.

**COLONIAL 32AC**

Oscillation, instability on high frequencies . . . open 35,000 ohm carbon resistor (pink) from screen of first r.f. to chassis.

*COLONIAL 32. Loss of volume accompanied by poor tone is usually due to an open first audio bias resistor. These are of the flexible type and breaks generally occur near either end. Unwind a few turns of resistance wire to cut out the break and resolder.*

**COLONIAL 32AC**

Distortion at high volume . . . defective 100,000 ohm resistor between center-top of input transformer and ground.

**COLONIAL 33-34**

Intermittent . . . shorted or broken phono switch controlled by tuning condenser, replace.

**COLONIAL 35 AC.** *Failure of this model to tune between 550 and 500 kc. is due to shorting out of the phono switch by the dial itself. Loosen the nuts holding the switch and push it farther back.*

**COLONIAL 85**

No reception. . . . Remove speaker plug from chassis and test for continuity between two smaller prongs. These are the primary lead of the output transformer which is subject to burnout due to heavy current of parallel 47's.

**COLONIAL 600A**

Intermittent . . . replace solid grid lead of 6A7 with flexible wire.

**COLONIAL C-995.** A hi-lo sensitivity switch, which will cut down inter-station noise when tuning locals with this a.v.c. model, may be added by removing wire lead between lugs 1 and 2 of the Candohm resistors, connecting a 100 ohm type between the lugs, cutting the ground connection to lug 1 and grounding lug 2. Drill a hole in the right side of the cabinet to receive a switch and connect the switch across the new 100 ohm resistor so that it may be either shorted out or placed in the circuit.

## COLUMBIA

### COLUMBIA SG-8

**Oscillation when volume control is advanced . . . insert a 5000 ohm resistor in the grid circuit of the detector.**

### COLUMBIA C2

Intermittent frying noise . . . usually caused by defective insulation between primary and secondary of the r.f coils. Very often a small amount of moisture in the coils will cause a similar trouble. Dry the set out thoroughly by placing near a source of heat for a few hours.

### COLUMBIA C-80A.

Distortion . . . check audio coupling condenser enclosed in capacitor case mounted above chassis. Also check grid coupling resistor of 47 which has tendency to change value. Correct resistance is 300,000 ohms.

### COLUMBIA C-101

Distortion . . . Replace 40,000 ohm 1 watt resistor in cathode circuit of detector. The original resistor has changed to high value. Resistor is located under a triple bank of coils.

### COLUMBIA C800A

Oscillation. . . . Check spray shield on tubes for contact with base prongs.

## CORONADO

### CORONADO 650

Intermittent . . . one or both of the two switches mounted on back of volume control is defective.

### CORONADO AUTO SET

Buzzes and crackles . . . poor internal conection in buffer condenser. Replace with new .01 mfd. 1600 volt unit soldered across plates of the 84. Buzzing may also be due to open grid return filter in output tube circuit. Connect .25 mfd. condenser between junction of two grid resistors and ground. This procedure eliminates vibrator ripple from the bias voltage. Condenser may be low voltage type.

## CROSLEY

### CROSLEY 5M3

Dead . . . shorted section of electrolytic condenser in can above chassis.

### CROSLEY 6H2

Cuts out on weak stations . . . lower section of 25,000 ohm bleeder resistor open.

**CROSLEY 7, 10.** Tube hiss . . . Connect 2 or 3 meg. resistor in series with screen of first detector 58, bypassing with 400 volt, .01 condenser. For better high-frequency audio response . . . Clip one lead of dual condenser used in tone control circuit. On dual 10 clip tinned wire coming out of end of condenser nearest tone control. On dual 7 clip tinned bare wire from end of condenser to plate of 2A5. This does not affect tone control operation.

### CROSLEY 7H2

Poor reception, volume control does not operate properly . . . open section of Candohm resistor. This is the 11,000 ohm section connected from screens to ground.

### CROSLEY 7H3

**Motorboating . . . Frequently caused by high-resistance ground connection in the shielded wire going to the grid cap of the 6B7.**

### CROSLEY 8H1

Excessive hissing between stations . . . Change 6F7 cathode resistor, a small, flexible type mounted on the back of the chassis, from 500 to 250 ohms. Also, shunt a 2,000 ohm resistor across the cathode bias resistor of the 6D6, nearest the power transformer.

**CROSLEY 8H1.** Common trouble . . . Balancing condensers located on top of i.f. coil cans short out to mounting screws, due to plates of condensers being out of line. Thus, when moved out of their original position they touch the grounded mounting pillars.

**CROSLEY 27, 28.** No reception, weak signals or intermittent reception . . . Check for faulty 1 mike bypass connected between s-g of 32 detector and ground. It is in a can, with two terminals exposed. Each terminal is a separate condenser with the common connection to ground.

**CROSLEY 30S.** Failure of replacement volume control to permit reduction of level to minimum required . . . Short 3,500 ohm resistor, in series with the control, completely out of the circuit.

**CROSLEY 30S, 31S, 33S.** Improving volume and tone . . . Put a 15,000 ohm resistor between positive side of the 55,000 ohm detector plate resistor and ground.

**CROSLEY 30S, 31S, 33S, 34S.** Common trouble which should be checked before wasting time on analysis . . . Sockets readily short to chassis as holes in chassis admitting them are too small for safety.

### CROSLEY 30S, 31S, 33S, 34S

Apparent shorted coupling condenser . . .Check socket prongs to ground. Chassis socket holes sometimes are too small to clear prongs.

*CROSLEY 40S. When tone is bad, pep lacking and an analyzer check shows positive bias on the first audio tube, replace the by-pass condenser connected between the detector and the first audio grid.*

### CROSLEY 41S

Noisy and distortion at high volume . . . replace 440 resistor under chassis. Check first r.f. coil for intermittent short.

**CROSLEY 42S.** Over-sensitivity . . . 5,500 ohm bleeder frequently opens, raising all voltages.

**CROSLEY 42S.** Low bias voltage on the detector, distortion . . . Frequently due to leakage between sections of the dual .5 condenser by passing detector and first a.f. bias resistor.

### CROSLEY 42

Insensitive, low volume . . . replace large 6000 ohm carbon resistor with wire wound 10 watt unit. The value of the original resistor has increased greatly due to overload.

### CROSLEY 42-S

Low volume, noisy reception . . . bottom plate of chassis touching center terminal of volume control. Glue a piece of insulating material to the plate to prevent contact.

**CROSLEY 53, 54, 57.** Noise and distortion, sounding like defective speaker. Look for trouble in coupling condenser between detector plate and 45 grid. Replace with unit which will withstand 300 volts.

### CROSLEY 54

Opening of heavy duty resistor in "B" supply network is most common trouble. If set whistles, look for defective volume control.

**CROSLEY 58, 59.** Hum, not traceable to filter trouble . . . Replace 1 megohm resistor in 47 grid circuit, connecting to high-voltage secondary tap.

**CROSLEY 58**

Dead. . . . Suspect metal cased condenser containing r.f. plate, screen and cathode bypass (part #W7753). It frequently shorts out, sometimes burning one or both of the Candohm resistors at the back of chassis. As a safety first measure solder the speaker plug to its socket connections under chassis. This is a constant source of noise and intermittant reception as plug often works loose.

**CROSLEY 72AF**

Oscillator will not track . . . replace mica condenser connected across oscillator trimmer. Condenser open or making poor contact.

**CROSLEY 77, 84, AMRAD 84.** Fading in and out . . . The remedy is often simply replacement of .1 mfd. condensers coupling r.f. coil sections to ground. It is rarely necesary to replace more than one.

**CROSLEY 95**

Poor quality, weak . . . Check polarity of speaker field leads.

**CROSLEY ROAMIO 98**

Dead . . . look for defective tone control. Replace with new control.

**CROSLEY 102**

Intermittent . . . broken or loose lead from r.f. transformer to gang condenser. Condenser is mounted on rubber and is permitted some movement breaking the lead. Replace lead but leave long enough to permit condenser movement.

**CROSLEY 120**

No reception, crackling . . . shunt 2000 ohm resistor across divider section supplying oscillator plate.

**CROSLEY 120**

No reception, background noises but not signals. . . . Shunt 2000 ohm resistor across divider section supplying oscillator plate.

**CROSLEY 122.** Type 24 oscillator fails to oscillate at low frequency end of dial and new 24A won't work at all in this dynatron circuit . . . Shunt a 1-watt, 750-ohm resistor across 650-ohm volume control and 24A will go to work.

**CROSLEY 124. Breaks into oscillation when light is snapped on or off anywhere in house . . . Move wires leading from a.f. transformer to grids of 47 from between socket terminals of 27 detector and 51 i.f. screen terminal and tie them near the detector choke.**

**CROSLEY 124**

Intermittent . . . partially shorted tuning condenser. A dead set which oscillates when finger is placed on 35 first i.f. tube indicates a defective 24 first detector tube.

**CROSLEY 124**

**Oscillation, sounds like loose voice-coil, small capacity from 47 grid to 47 grid clears it up . . . Caused by inductive pickup by leads of 47 tube grids from audio transformer secondary. Remove leads from present position between detector and i.f. sockets and fasten with string or tape to mica condenser on side of chassis.**

**CROSLEY 124.** Fading. Look for cold-soldered joint on i.f. transformer lug.

**CROSLEY 124-1.** Fading, signal returns to normal volume if set is switched off then on again, or if tube is pulled out and then re-inserted . . . Replace condenser block W22412 which contains four .1 condensers.

**CROSLEY 124-1.** Fading and intermittent reception . . . Generally due to high leakage in one of the four .1 condensers located in condenser-block No. W22412. Also check the two .25 mfd. units and the .5 mike in block No. W23736 for high leakage. (IF 175 kc.)

**CROSLEY 125**

No plate voltage on oscillator detector. Check i.f. trimmer condensers. Inspect the mica separators for possible short.

**CROSLEY 127.** Sudden drop in volume accompanied by failure of the tuning meter. Partial short in the i.f. transformers.

**CROSLEY 129.** Oscillation at high frequencies after usual tests have shown up nothing . . . Check value of fixed portion of volume control. It should be 200 ohms and is critical. If necessary, put in a 25 ohm resistor in series, raising the value of the fixed unit to 225 ohms.

**CROSLEY 130.** Dial off frequency, or frequency settings "drift" . . . Do not adjust oscillator trimmer until you are sure the dual filter and screen grid 8 and 4 mfd. condenser is not leaky or open. Original unit breakdown voltage is 300 for the filter section, 150 for the screen. Replace with 450 volt and 200 volt sections. (IF 181.5 kc.)

**CROSLEY 130.** Oscillation, lack of volume, hum . . . Check for failure of 4 mfd., 300 volt section of dual cardboard type dry electrolytic. Use a 450 volt job in this position.

**CROSLEY CHIEF 132.** When this 12-tube super plays, but volume is shy and all tubes, voltages check ok . . . Unsolder .0001 condenser between cathode of 56 used as diode detector and 5 meg. resistor and check it for a short. This trouble is difficult to locate and relatively common.

**CROSLEY 143**

Distortion . . . open tone control. Since this feeds bias to the driver tube, an open circuit removes the bias.

**CROSLEY 146.** Local stations received weakly, voltages ok . . . Look for open 12 mike condenser section of dual filter and cathode 6 mike cardboard encased unit. Replace, if "out" with 12 mike 400 volt job. Lower breakdown units will not last.

**CROSLEY 148.** Dead, or weak signal . . . Generally due to increased value of wire-wound, impregnated resistor under chassis from i.f. coil to plate and cathode of 58. Replace with two-unit type with an 8,500 ohm and a 25,000 ohm resistor, 10 watt types.

**CROSLEY 148**

Dead . . . check first i.f. plate trimmer for short to ground. Replace trimmer or insert new mica.

**CROSLEY 148.** If set cuts out or works poorly on low line voltage replace 2.5 volt pilot with a 6-volt bulb. The pilot is wired across the 6.3 volt tube circuit and sometimes reduces heater voltage to below normal.

**CROSLEY 148**

Intermittent reception . . . High resistance short often develops in the padding condenser due to entry of dust and dirt. Clean with carbon tetrachloride.

**CROSLEY 148.** Periodic drop in volume, distortion. See if the twin cub condenser in resistance-coupling network between detector and a.f. is reversed. The .03 should be the coupling condenser between 57 plate and 42 input grid. One terminal of the .001 should be grounded and the other connected to the detector plate. Some condensers have wrong markings and the .001 is incorrectly connected between ground and a.f. tube grid.

**CROSLEY 148-FIVER.**

Set dead below 1,200 kc., volume control inoperative after half revolution, oscillation over entire band . . . Suspect the 6-8 electrolytic and substitute another for test as it sometimes shows up ok with respect to leakage and still causes trouble. Use a higher breakdown type.

**CROSLEY 148, 167, 169.** No reception, voltages ok . . . Sometimes due to shorting of intermediate transformer tuning condenser suspended in square hole cut in chassis between 58's. Caused by puncture of mica spacer when screw is driven down too tight. Slip small piece of mica under hinge part of condenser plate and re-align. Also check for similar trouble in the other postage-stamp condenser located on top of the chassis. Oscillation . . . Try a .02, 600 volt condenser from ground to power transformer side of a.c. switch. Never use a 2.5 volt pilot in chassis having 42 tube as this causes fading; stick to 6.3 or 6.8 lamps.

**CROSLEY A-157..**

Set stops playing when jarred . . . install new tube socket for the 6A8G as original unit does not grip the prongs tightly enough.

**CROSLEY 158.** Local stations barely audible with volume on full . . . Look for open 750 ohm resistor connected from grid of 58 to ground.

**CROSLEY 160.** Poor tone and lack of volume . . . See if 59's are matched. If trouble is experienced in matching push-pull stage plate currents connect a 100 ohm, ½ watt resistor, preferably non-inductive, in series with each control-grid right at the sockets.

**CROSLEY 160**

Weak . . . replace the 20,000 ohm oscillator cathode resistor with 5,000 ohms.

**CROSLEY 163**

Bad distortion after set warms up . . . replace 150,000 ohm resistor in the cathode circuit of the 77 with 100,000.

**CROSLEY 167.** Low volume and distortion . . . Frequently traceable to leak between filter condensers and cathode by-pass section for the 2A5.

**CROSLEY 167.** Set works on high frequency end but dies out on low, or cuts in and out . . . The .1 mfd. condenser across the 3,500 ohm resistor in the cathode circuit of the first 58, the first detector-oscillator, shorts out and sometimes partly shorts.

**CROSLEY 167**

Oscillation all over dial when volume is turned on full, noise like foghorn with control at minimum . . . Look for open or lowered value electrolytic filter block on underside of chassis directly beneath power transformer. To locate defective unit shunt 8 mike, high voltage test unit across one at a time.

**CROSLEY 168.** Pronounced hiss in background, on all stations, even when correctly tuned . . . Try several new 2A6's, 56's and 2A5's. If this does not help put from 400,000 to 100,000 ohms across the primary of the first i.f. transformer, using the highest permissible value.

**CROSLEY 168**

No reception . . . open section of filter condenser Nos. 23–24.

**CROSLEY 170.** Repeated burning out of 80 rectifier . . . Cause is electrolytic condenser, part 29097, which shorts and then cleans itself. Replace it.

**CROSLEY 170.** Improving tone and volume . . . Connect a 2 to 4 mike bypass across the a.f. stage bias resistor. Improving sensitivity . . . Reduce value of diode load resistor from .5 meg. to .35 or .4 meg. This will also reduce background noise.

**CROSLEY 170**

Oscillation, reception only when finger is placed on grid of first 58 tube . . . look for opening in r.f. oscillator coil located in back of band switch.

**CROSLEY 170, 171.**

Loss of volume and noisy operation . . . Examine .0005 tubular condenser in series with antenna coil.

**CROSLEY 171**

Q. A. V. C. won't work, poor volume . . . Bad section in candohm resistor part number W28471.

**CROSLEY 173**

Weak reception . . . usually can be traced to open speaker field. Also check 8 mfd 25 volt electrolytic connected from first a.f. 78 suppressor grid to tuning condenser.

**CROSLEY 178**

No control of volume . . . shorted condenser from filament of 32 tube.

**CROSLEY 425**

Distortion . . . check dual .5 mfd condenser which bypasses the second detector and first a.f. bias resistors for leakage.

**CROSLEY 515**

Weak, or intermittently weak . . . Section 7Z (.02, 200 v., 6D6 cathode bypass) of part W28623 dual tubular condenser is probably at fault regardless of how it may test. Snip leads and substitute a single replacement unit.

**CROSLEY 515, 5515, FIVER**

No reception . . . often due to open in two-section Candohm resistor at rear of chassis sub-base. Overall resistance: 33,500 ohms; long section, 25,000 ohms; short section: 8,500 ohms. In event of open in either section, and original replacement not available, use 5-watt resistor of corresponding ohmage.

**CROSLEY 517T**

Distortion . . . In these sets the 16 mfd filter is insulated from the chassis by fiber washers. Since the condenser is in the rear of the chassis it is often used for lifting the chassis, throwing the electrolytic can off center and shorting to chassis.

**CROSLEY 515, 5515, FIVER**

Dead . . . suspect short in 0.006 mfd. condenser, connected between plate 2 and ground of 6B5. Unit is in same tubular container with 0.02 mfd. tone control condenser. Center terminal (going to plate 2 of 6B5) is common to both sections; therefore, to eliminate 0.006 mfd. section, clip chassis connection from unit as close as possible to container and install single unit 0.006 mfd. condenser from plate of 6B5 to chassis.

Intermittent . . . check for break in voice coil of speaker.

Defective tuning mechanism . . . when station indicator does not follow rotations of panel control, trouble often due to loose rivet protruding through rear copper disc on end of control shaft. By soldering rivet to disc, trouble is corrected. Caution: remove celluloid disc from between copper discs before soldering operation.

**CROSLEY 556**

When the volume control fails in this set, it often is difficult to procure a new one because of its special characteristics. A positive substitute can be made with a 2000 or 3000 ohm wire-wound potentiometer and a 3pst switch. Connections are shown in the accompanying schematic.

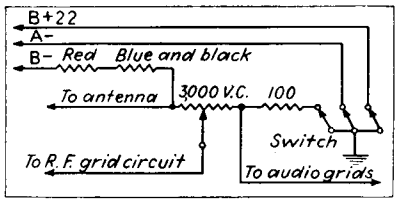


**CROSLEY 608 GEMBOX**

Common faults, in order of occurrence in the field . . . Failure of 0.5 condenser under chassis, power transformer lamination hum. To cure such hum loosen several lockbolts, hit laminations gently with hammer to set them. When hum stops carefully tighten bolts, tapping again while this is being done if hum reappears. Noisy volume control. Clean or replace. Gentle sanding with 0000 sandpaper and rub with vaseline cleans many satisfactorily. Freezing of dial. Replace drive gear or repair by smoothing burrs on gear and holes where it turns. Freezing of regeneration control. Replace. Poor tuning, cuts off near 100 on dial. Check tuning condensers for spacing and tracking. Burrs frequently short condensers when over half meshed.

**CROSLEY 555**

Loss of volume . . . leaky condenser No. 14 in schematic connected between anode grid of converter and primary of oscillator coils.

**CROSLEY 601.** Filament rheostat shaft shorts to metal panel, heating wire and destroying fiber insulation without damaging wire itself. Equip shaft with insulating bushing, fill in between wire turns where charred with heat resisting cement and pulverized asbestos, smearing mixture on wire to hold it firmly. When dry, scrape mixture from contact surface with knife.

**CROSLEY 610**

Fading, hum . . . loose rivet on filament centertap resistor. Remove resistor and clamp rivet tighter in vise.

**CROSLEY 617**

Noisy, intermittent . . . tighten 6A8G socket clamps and realign as sensitivity and selectivity is affected by vibration of Dynatrol.

**CROSLEY 635**

Oscillation or dead . . . check condenser 17B in schematic connected between cathode and screen of 6A7.

**CROSLEY 635**

Bad oscillation from 700 kc to 800 kc, whistles on other stations . . look for leaky .02 mfd condenser from screen to cathode of 6A7.

**CROSLEY 644**

Dead except for weak signals on high frequency end . . . open 0.1 mfd condenser between anode grid of 6A7 and the band switch.

**CROSLEY 648**

Intermittent operation . . . replace 60,000 ohm resistor connected from 6A8 oscillator grid to chassis.

**CROSLEY 648**

Intermittent . . . replace the 60,000 ohm resistor connected from the 6A8 oscillator grid to chassis.

**CROSLEY 706**

Fuse blows . . . replace fiber bushings on field supply.

Voltage divider gets extremely hot . . . replace .5 mfd. condenser from center arm.

Noisy tuning . . . burrs on stator tuning plates. Can be cleaned off with long sharp knife blade.

Dial light flickers, noisy . . . replace A.C. switch.

Poor tone, volume increases when one output tube is removed . . . Small wires on "F" type speaker unit broken.

**CROSLEY 706.** No plate voltage on r.f. tubes. Caused by shorting of .5 mfd. condenser.

**CROSLEY 706**

Intermittent . . . screw on aerial terminal works loose due to worn threads. Solder small length of wire to lug under screw and attach aerial to other end of wire instead of to terminal.

**CROSLEY 706-60.** Excessive hum despite ok circuit check. Replace 27 detector with a 56 and connect 1/10 mfd., 200 volt condenser from chassis to detector heater at fourth terminal from front of chassis on brass strip connecting pack with chassis.

**CROSLEY 715**

Intermittent reception, accompanied by oscillation . . . if normal when finger is placed on grid cap of 2B7 at rear of chassis replace defective 3 section filter (part No. W-36056).

**CROSLEY 715**

Intermittent reception accompanied by oscillation. . . . If set operates normally when finger is placed on grid cap of 2B7 tube at rear of chassis replace defective 3 section filter condenser (part #36056).

**CROSLEY 814**

Distortion, poor volume and sometimes no signal . . . Open 10,000 ohm candohm resistor section. This is from screens to ground.

**CROSLEY 1127, 1117**

Poor tuning-eye action . . . remove cathode lead from ground (black wire) and connect to the lower end of the diode load resistor.

**CROSLEY 156.** Failure to oscillate, regardless of volume control or regeneration control setting. Remove regeneration condenser and bend plates away from each other.

**CROSLEY 1516**

Neon tuning won't work . . . open 30,000 ohm resistor No. 68.

**CROSLEY**

On some models the bolts that hold the chassis to the cabinet are different lengths. Always be careful to replace these bolts exactly as they were originally. Replacing a long bolt in the wrong position could result in a punctured filter condenser or similar damage.

**CROSLEY BAND-BOX.** Variables slip on their shaft in this model, making the set squeal and howl. Trouble is often difficult to find as condensers are mounted upside down.

**CROSLEY.** Slipping of dial on lower-priced models using friction drive . . . Remove dial and note if tension spring is held by washer headed onto shaft. Knock off washer and remove spring and back piece of brass. Note whether or not a shoulder has been worn in the brass. If so, file or grind this off, replace and rehead the washer onto the shaft. If impossible to rehead push washer down tight on spring, hold and solder. If it seems impossible to remove spring and brass piece take the friction part and fit a piece of stove pipe wire into the slot into which the dial edge fits. Be sure it is cut in such a length as will fit snugly and force it in tightly.

**CROSLEY FIVER.** Be sure 6.3 volt and not 2.5 volt pilot is used as reduction in heater drain caused by use of smaller bulb permits voltage to rise and causes erratic oscillator operation, frequently intermittent reception.

**CROSLEY FIVER**

Noisy when jarred . . . improper ground connections on the tuning condenser rotor. Ground with a small piece of flexible wire.

**CROSLEY MUSICONES and DYNACONES.** Repair data on types A to F, inclusive . . . If cone is crushed . . . Remove from speaker. Iron out with fairly hot flatiron, holding point of iron snugly in center of cone. Swing back of iron from side to side, pivoting on point. Iron out only a small portion at one time, shifting cone around. A large magazine should be placed under the cone. Do not use water to dampen as it may cause blisters. Too hot an iron will burn cone. Before replacing unit always straighten out the armature pin, put a drop or two of oil on the adjusting screw, center the adjusting screw accurately. After replacing cone be sure that base seats snugly without having a tendency for "star" to crush into it, or cause cone to bulge. Adjustments . . . Have speaker playing. Screw in until it rattles. Screw out until it rattles. Count the number of turns between these two adjustments and turn the screw back in half that number of turns. This centers armature.

**CROSLEY Roamio.** New sets which are insensitive except at trimming adjustment points should be examined for reversal of first detector antenna and grid coils. These are small units of the choke type.

**CROSLEY Totem.** Smoke. Heat from filament resistor melts filter condenser compound. Re-mount resistor and plate choke. Takes 20 minutes.

**CROSLEY Showbox. No r.f. plate voltage. Shorted 5 mfd. condenser bypassing B-supply lead is reported as most common cause.**

**CROSLEY SHOWBOX. Fading. Try soldering a piece of wire on bottom of aerial lug and fastening the other end under the screw at the top of the aerial and ground strip. Distortion or dead set. Apply heat with soldering iron to the case of the a.f. condenser. Then push back high potential terminals.**

CROSLEY. Certain Mershon condenser models hum and may be repaired by drilling a ¼ inch hole in the bakelite top of the electrolytic unit, being careful not to damage the "innards," filling with distilled water to a point about ¼ inch from the top and closing up the hole again with sealing wax. Discharge the condenser before drilling.

## DETROLA

### DETROLA 6W

Weak . . . check 75,000 ohm plate resistor in i.f. stage. Distortion . . . Check 25 mfd electrolytic across 42 bias resistor for short.

### DETROLA 5B

Distortion after about 10 minutes operation . . . . look for open section of candohm resistor located at the right of the ground connection. Replace with 100 ohm 5 watt unit.

### DETROLA 191E

Power transformer heats . . . check power transformer leads for short where they pass through hole in chassis.

### DETROLA 288 PORTABLE

Oscillation, noisy, frequency jumps. Negative A and B terminals grounded to socket. Solder socket frame to chassis as rivets make poor connection.

## DELCO

**DELCO 630, 500.** Common complaint is lack of reception on stations that are not local, but which should nevertheless be within range . . . Due to blocking of weak signals by noise-suppression circuit. To correct make the following simple wiring change: Remove the wire connecting the ground end of the volume control to the chassis ground. Connect this ground lug of control to cathode of 6D6 tube. In some instances it is found that the above change results in the appearance of vibrator noise not bothersome before. To eliminate it after making the suggested change connect a 100-ohm resistor in series with the 275 ohm common bias resistor for the 6D6 and 6B7 tubes. Put it between the cathodes and the old resistor, re-connecting the bypass condenser across both the old and new resistors. Connect the lead from the volume control to the junction between the resistors.

### DELCO 500

No volume . . . Connect a .001 mfd condenser from the lug on top of r.f. section of gang condenser to grid of first detector stage.

### DELCO 641-654

Fading . . . resolder oscillator coil terminals.

### DELCO 644

Fading . . . check for short to lug on loading coil in series with antenna coil.

### DELCO 644

Fading . . . look for short of secondary trimmer lugs on second i.f.

### DELCO 1117

Poor tone . . . readjust speaker by drilling out riveted washer which holds spider in place. Adjust cone with spacers as usual; fasten with self tapping screw and same washer.

### DELCO R1117

No tuning eye action, frequent 6G5 replacement, no pep . . . ground brown lead coming from tuning eye socket.

### DELCO R1119

Tuning eye inoperative, no plate voltage on 6L7 tube . . . shorted .01 bypass condenser and burned 15,000 ohm resistor. Replace both resistor and condenser.

### DELCO R-1119

**Repeated blowing of line fuse during warm up period . . . Replace 3 mfd. 250 volt electrolytic condenser with 400 volt unit.**

### DELCO R1126

Oscillation . . . Replace 8-8 mfd filter. If a high pitched whistle still persists connect a .002 mfd unit from plate of output tube to ground.

### DELCO R-1129

Distortion and hum when signals are tuned in, 6E5 not operating . . . replace 6E5.

### DETROLA MIDGETS

Distortion . . . replace .5 meg plate resistor of 6C6 detector with .25 meg.

### DELCO '36, '37

Impossible to align correctly without squealing or uncontrollable oscillation. This is particularly common on models using 6A7 and 6B7 tubes. Grid and plate prong on 6A7 very close, causing feedback. To remedy, cut lead to plate prong to absolute minimum and shield. Also, insert insulated piece of braid between grid and plate prongs; ground braid.

### DELCO CHEVROLET 985200

Blows fuses . . . look for short from can to ground of 4–12 mfd electrolytic. To remedy: take can out of clamp and insulate with heavy paper and cambric.

### DELCO AUTO SETS

Most of these receivers have a 1,500 ohm resistor in series with one of the 6D6 cathode leads. Sensitivity can be increased by substituting a 300 to 500 ohm unit.

Dead . . . check tone condenser for short.

Vibrator hash . . . defective 42 output tube. Also try 8 mfd. electrolytic from one side of the heater to ground.

## EMERSON

### EMERSON 5A AUTO RADIO

Insensitive, poor a.v.c. action . . . replace cathode bias resistor on 85 tube with 14,000 ohm unit. Also replace 10 mfd low voltage condenser in same circuit.

### EMERSON 5A

**Insensitive . . . replace 14,000 ohm cathode resistor on 85 tube. Resistor has greatly changed value.**

### EMERSON DS5

Low volume . . . Check plate voltage of 2B7; if low, replace 100,000 ohm plate resistor.

### EMERSON H5

Loud hum; filter condensers and tubes check O.K. . . inspect the ballast resistor for leakage from taps to ground. This resistor is covered with asbestos then protected with a metal sheath. If leakage is found, insulate sheath from chassis.

### EMERSON H5

Hum, condensers and tubes check o.k. . . . check for leak between line dropping resistor and ground. This is a metal cased unit and very often a leak through the asbestos occurs.

### EMERSON U6B

Weak or dead . . . check C7, .1 mfd 6A7 screen bypass. Also .1 mfd 25Z5 plate to cathode bypass.

**EMERSON U6D** Frequency drift, requiring constant retuning in the broadcast range . . . Frequently trouble will not appear when chassis is removed from cabinet and placed on bench but will reappear again in the cabinet. Trouble is in midget type compensating condenser in series with broadcast oscillator coil. Drill ⅜ inch holes in the cabinet base near this condenser to ventilate it and drift, due to heating, will disappear.

EMERSON MAC-7

Dead . . . look for open 2000 ohm ½-watt cathode resistor on 58.

**EMERSON M-AC-7.** Hum, after being in service several months, not due to open filter or other common causes . . . Check high voltage winding of power transformer with an ohmmeter. The winding sometimes partially shorts, throwing the center-tap off.

**EMERSON 20A, 25A.** Excessive oscillation . . . Remove antenna wire coil from inside case. Even a small amount within chassis causes trouble.

**EMERSON 26.** Complete or partially distorted output, intermittent distortion or whistling . . . Defective 15,000 ohm, ¾ watt resistor dropping screen voltage of 57 second detector. Replace with 1 watt unit. (I.F. 456 kc.)

EMERSON 26

Overloading on strong signals . . . second detector plate resistor has greatly increased value: replace with lower value.

EMERSON 30 AW, 33 AW, 250 AW, 321 AW, 350 AW

Motorboating, intermittent . . . Replace .01 mfd. coupling condenser on grid of 43. Also change ¼ meg. grid resistor to 100,000 ohms.

EMERSON 32

Hum, no reception . . . open in condenser block beneath chassis. Shunt an 8 mfd condenser across terminals.

EMERSON 36

No screen voltage . . . shorted or leaky .02 mfd. screen bypass. Often this causes the 9000 ohm section of the voltage divider to burn. If damaged replace divider with 9000 ohm 2 watt and 27,000 ohm 1 watt.

EMERSON 38, 42, 49

No reception . . . check for open in 0.01 mfd. tubular condenser, connected between grid of 75 tube and low end of i.f. winding feeding diode plates of same tube.

Dead . . . heat generated in filament voltage-dropping resistor frequently causes loose connections of terminals of unit. Wind leads securely on terminals, resolder.

EMERSON 107-W

Distortion . . . check resistance from 43 grid to ground, should be approximately 1 meg. Lower reading indicates breakdown in C22, a .1 mfd condenser.

EMERSON 116

Dead on portion of the broadcast band. . . . This is caused by the 6D6 mixer oscillator plopping out of oscillation. Replace 6D6 with a 6C6.

EMERSON K116, K121, K123

Inability to rotate tuning condensers with panel control . . . remove chassis from cabinet; if belt in good condition, slip spring off bracket; and, with pair of pliers, bend spring so that when replaced it pushes pulley more firmly against belt.

EMERSON AX 211, 212, 217, 219, 221

Intermittent noise which continues regardless of volume control setting . . . carefully resolder control grid cap on 6Q7GT tube. Grid lead of tube making poor contact with cap of tube.

EMERSON AX211

Intermittent or weak . . . Check antenna coil (large black coil at rear of chassis). Ground end of coil is soldered to a large lug which is in turn soldered to chassis. This lead breaks and makes only partial contact.

EMERSON 409, 410, 411 (CHASSIS A-4)

Weak, distorted . . . defective 500,000 ohm resistor, connected to 6F7 pentode plate, often responsible. Try new unit.

EMERSON JS

Weak or dead . . . 0.06 mfd. condenser, connected between 7 plate and arm of tone control, likely shorted. Also check tone control for damage occasioned by condenser breakdown.

Notes . . . manual schematics of this model show resistor R243 connected to high voltage center tap of power transformer. There should be no connection, however, and the short line joining them should be deleted. For aligning instructions, refer to International Radio Corp., model JS.

**EMERSON T, TS.** Improper detector 24 plate and 47 plate current . . . Replace coupling condenser, grid to plate, with .01. Noisy tuning . . . Bend up contact springs on rotor or attach pigtail to chassis, not to end plates. Failure of TS to oscillate on shortwaves . . . Attach lead to grid of 24 and bend in place near or around coil mounted on back of 24 shield. Adjust until oscillation occurs uniformly across dial.

## ERLA

**ERLA, BRANDES.** Cutting out often caused by defective local-distance switch. Contact material becomes loose in spring. Put contact in tapered hole and centerpunch around edge to retighten.

## ESPEY

ESPEY MYSTIC RECORD PLAYER

Microphonic oscillation . . . shift the oscillator to about 900 kc. This action tightens the padder and removes plate vibration.

## FADA

FADA 25

Weak . . . test the bypasses connected across the plate and cathode of the 27 detector. Replace with .001 mfd unit.

FADA 25-Z

Weak, poor tone . . . replace .25 mfd. 400 volt condenser from ground to green resistor at center bottom of chassis with 8 mfd. electrolytic unit.

FADA 25-Z

Dial slips . . . . check clearance between dial drum and volume control.

FADA 25-Z

Volume control inoperative . . Green 20,000 ohm resistor grounding.

**FADA 66.**

Oscillation on one of more shortwave bands . . . Connect 300 ohm, non-inductive resistor in series with the control grid lead to the 24A first detector-oscillator.

FADA RK 100

Interference . . . . check leads from power unit to receiver. They are in a metal shield which should be grounded to car frame.

**FADA RA.** Weak reception, voltages ok. . . . Try another 56 oscillator, no matter how high the old one tests. Noisy volume control . . . Try a new 56 in the first a.f. socket before replacing control. Continuous "static" . . . Cut out primary of push-pull transformer and couple with 25,000 or 50,000 ohm resistor and .01 condenser from plate of 56 to grid of 47. If customer likes a nice rain-barrel tone use .1 mfd.

FADA. Some of the older models use special knobs equipped with tension springs which fit in a notch cut into the shaft. To hold these in place while replacing knobs first put a little soft pitch or candle tallow in the notch.

**FADA.** Slipping dial on early models having separate driving drum. Loosen setscrews and give drum half-turn. This brings unused portion into play. If drum is worn all around remove and file down on one end of bushing. This permits it to slip farther into drive unit and cures trouble.

**FADA.** *Slipping dials are the pet weakness of some of the older models. Remove the drum from the condenser shaft and lay it flat on its wide side. File about 1/16 of an inch of metal off the flat side of the dial "neck" which normally rests against the spacing collar. When replacing it push it hard against the spacing collar before tightening the set-screws. This causes the edge of the drum to be firmly wedged in between the plates of the drive assembly.*

## FAIRBANKS MORSE

FAIRBANKS MORSE 42

Motorboats when volume is advanced on strong stations . . . suspect 8 mfd condenser or resistor connected to volume control.

FAIRBANKS MORSE 44

Loud howl that disappears when tone control is set to bass . . . Replace bias cell in grid circuit of output tube. Before replacing, clean all contacts thoroughly.

**FAIRBANKS-MORSE 238T32.** Noisy reception . . . Due to vibrator unit being tightly mounted to the chassis. The factory uses only one screw in mounting this unit although it is drilled and tapped for two. Insert ½ inch of sponge rubber washer between the metal washer under screw head and bottom of chassis. The marked improvement is well worth the trouble.

FAIRBANKS MORSE CONSOLE MODELS

Acoustic feedback . . . insert ¼ in. rubber grommets on screws between tone projector and speaker.

## FARNSWORTH

FARNSWORTH AT50

Weak on short waves . . . realign at 15 mc. although factory recommends 18 mc.

FARNSWORTH AKL59

Shock when phono pickup arm is touched . . . break shield on wire connecting set chassis and phono arm and insert .1 mfd condenser.

## FIRESTONE

**FIRESTONE 1322.** Speaker rattle . . . Look for loose solder in speaker. Microphonics . . . Loosen condenser rubber washers and tighten all nuts and screws. Case buzz and rattle . . . Loosen Parker-Kalon screws, take cover off, bend, replace.

FIRESTONE R1431

Dead in upright position, satisfactory operation when up-side-down. . . . Look for burned braided lead in vibrator can.

FIRESTONE S7425-3

Intermittent . . . . one of the i.f. terminal lugs intermittently shorting to back of speaker.

## FORD

**FORD III.** Lack of sensitivity at high-frequency end . . . Replace 8,000 ohm cathode resistor in 38 autodyne circuit with 6,000 ohms.

**FORD 35.** Dial jumps calibration . . . Remove cog-wheels from dial assembly. Lightly beat out cog-wheel which holds pointer with hammer until it thoroughly meshes with intermediate driving gear.

**1933 FORD. To get suppression at coil remove the three screws and terminal nut and take the coil off. Pull out the carbon brush and spring, saving the spring and discarding the brush. Make a suppressor from a 40,000 ohm one watt carbon resistor of good quality by cutting it to the same length as the old brush. Clean off paint and file recess in one end to accommodate the spring and re-assemble the coil, using the suppressor as a brush. 40,000 ohms is recommended as the resistance is reduced by cutting and filing.**

**FORD 35.** Low volume, sensitivity ok, cuts on and off . . . Header speaker cone leads often short to steel spring used as their support. Remove leads from support to remedy.

**1935 FORD.** Inability to quiet ignition noise, despite standard suppression . . . A 1 mike condenser from the hot storage battery connection on the gasoline gauge to ground is essential. Other filtering tricks suggested are: Complete shielding of hot A lead from battery to set and shielded wire from resistor connection on instrument panel to distributor, removing old wire. Ground shield to cowl, engine and body.

**1935 FORD.** Noise from ignition after all usual methods of clearing it up in these cars fail. . . . Scrape paint off under side of hood where it fits on the cloth head of the body. Wrap bare copper wire around head and ground it at each speed screw fastening the head in place. The hood will then make good electrical contact with the body and frequently clears up radiation of the racket to the antenna.

**FORD-MAJESTIC.** In types using separator vibrator, blown fuse or heavy "A" drain . . . Probably due to blown .01, 1000 volt condenser located across power transformer secondary. Replace with .01, 1200 volt unit made up of two .02, 600 volt tubulars if single unit is not on hand. Can containing transformer, rectifier tube and vibrator unit easily removed by uscrewing nut and lock washer holding down unit and lifting out. Before replacing check contacts for burned wires. Excessive current sometimes melts solder and burns two vibrator wires. File points, resolder and remount. Failure of 6Y5 in models using this type . . . Replace with 84, changing socket to 5 pin type and discarding wire originally connected to spray shield. If excessive noise is heard connect .25 or .5 mike low voltage paper capacitor directly across filament of rectifier. If filter blows . . . replace with dual 4, 4-6 or 4-8 dual as value is not critical.

**FORD-MAJESTIC.** Repeated breaking or fraying of cable where set is mounted in floor . . . Use number 10 spring-steel piano wire, fishing this through from control head end of sleeve to replace old stranded cable. With this new wire slack, a troublesome feature of the stranded stuff, disappears.

**FORD-MAJESTIC.** Persistent motor noise when antenna is off . . . Due to leakage through ventilating louvres in back of case. Cut piece of copper screen same size as back of chassis and fasten to case over louvres with self-threading screws holding the case together.

**FORD-MAJESTIC.** Set completely dead . . . Plug in and note ammeter drain. If abnormally high remove transformer pack and replace small vibrator condenser at side of transformer. If screen voltage is absent remove speaker and plate cover to right of speaker and then replace the brown resistor.

**FORD-MAJESTIC.** Set performs ok on bench, but when lid is pressed down, in car, cuts in and out while riding . . . . Put paper discs in top of tube caps so that these cannot short to shields.

FORD PHILCO FT6

Intermittent low volume . . . replace buffer condenser across rectifier plates. (Resistor in series with this condenser).

FORD PHILCO FT6

Insensitive . . . check a.v.c. action. Connect a 1 or 2 meg resistor in place of the 190,000 ohm resistor connected between second detector cathode and 25,000 ohm resistor in grid return of second i.f. transformer. Also, remove the 25,000 ohm bleeder located below tuning condenser under chassis.

**FORD-PHILCO 1934. Periodic drop in volume accompanied by sharp click . . . Look for wires to terminals on inside of i.f. coils touching trimmer rivets and changing condenser capacities. (I.f. 260 kc.)**

FORD-PHILCO 1934

Distinct vibrator buzz that is hard to correct . . . Take out 75 second detector-a.v.c. tube. If noise stops suspect shaft collar holding volume control to case. Another check for this trouble is to find low settings of volume control more noisy than higher settings. Give collar another hard turn with a wrench to dig through paint and slight corrosion and also run a heavy, short piece of braid from low point of volume control to case and solder well. This will eliminate all buzz from this source.

FORD PHILCO (1936)

Volume decrease when control turned on full, distortion . . . open secondary on second i.f.; replace.

**FORD-PHILCO N.** No signal, voltages and tubes ok . . . See if padding condenser soldering lugs mounted on tuning condenser frame have punctured through insulating paper glued to fixed condenser can beneath, grounding out i.f. Slip new piece of heavy insulating fibre under the lugs, if this is the trouble, and bend the lugs up.

**FORD PHILCO 1937**

Ignition interference . . . Male end of antenna lead making poor contact in set socket. Solder short heavy braid to shield on male cap and fasten securely under edge of junction box after first cleaning off paint.

If some noise still persists, bond the middle screw on set cover to dash, also junction box to emergency brake bracket screw.

**FORD V-8 NOISE ELIMINATION**

Ignition interference . . . insert r.f. choke, made by winding 12 to 14 turns of 14 d.c.c. wire on ½ in. form, directly at the fuse terminal with other end direct to lead to set. This "Hot A" lead should be as *short as possible* and shielded right down to the set, grounded only at the set end. Try several small mica condensers from 50 to 250 mmf. between r.f.c. and open end of shield.

## FREED

**FREED MB9-90**

Fading . . . replace .02 coupling condenser between 55 and 56. Vibration or tapping will cause this condenser to short.

## GENERAL ELECTRIC

GE, RCA. In avc equipped models locals sometimes snap in and out as they are tuned-through. Substitute a new 35 for those in RF and IF stages until the trouble is found.

**GE C14.** Operates at low volume on long antenna and will not play at all on regular car type, volume control has no effect . . . Check for open .02 (C16 on diagram) mfd. condenser connecting diode section of 6B7 through variable arm of control to grid of triode section of same tube.

**GE H31, H51.** Intermittent reception . . . Check primary of i.f. transformers. Trouble is usually in the second. Distortion at low volume settings of the volume control on locals . . . Usually caused by drop in value of 110,000 ohm unit on resistor strip.

**GE 40.** Noise after standard suppression has been installed. Ground rubber-mounted triangular plate of tuning control sheath to side of chassis.

**GE 40B (RCA).** Loud roar after set warms up . . . Check for arcing at vibrator points. If found, connect 500,000 ohm resistor across transformer secondary, the terminals of which are brought out to two insulated screws. Connect two .01 mfd. condensers across secondary, in series, grounding midpoint between them. Use 600 volt capacitors.

**GE B40 (RCA M30).** Fuses blow immediately upon being installed . . . Most often caused by shorted .03 mfd. condensers in vibrator base.

**G. E. K-40A**

No volume . . . worn insulation on antenna lead where it passes through chassis.

**GE B40, RCA M34**

Hash, difficult to remove even with all condensers replaced and vibrator points functioning properly . . . Be sure screws holding vibrator in place are tight, shielding of cable to control head is ok and securely soldered to base of vibrator. Shield ends of two screws holding red and green wires coming out of vibrator base. Make this extra shield in form of box without lid, soldering to chassis at end of terminal board over screws. Depth of box should be sufficient to clear the screws nicely as they are at high potential.

**GE K40A.** Weak and distorted reception . . . Most common cause is excessive leakage or total shorting of double 4 mike electrolytic condensers. The most troublesome unit is the one connected in the 25Z5 circuit, the next best bet the one in the 77 or 78 cathode circuits. Sometimes the set does not operate after these condensers are replaced. If this trouble is encountered, try changing the 25Z5 tube even though it shows up ok in a checker. If the rectifier is causing trouble usually the 38's plate current will be abnormally low while other voltages seem to be about right.

**GE S-42B (RCA R-43)**

Distortion at high volume . . . a few shorted turns on one side of primary of input transformer (No. 7265). Check by inserting milliammeter in each of p.p. plate leads and compare current peaks on loud signal. Any marked difference indicates defective transformer; replace.

**GE K43.**

A.c. hum, especially noticeable on stations, in early models . . . Connect 500 ohm resistor from set side of .01 antenna condenser to chassis. Later models came through with an r.f. choke in this position.

**GE S42.** Noisy, or cuts out when jarred . . . Before removing chassis try removing 35 i.f. tube and 24 first detector and tightening bolt between them. It works loose quite often and inasmuch as it holds the oscillator coil in place and provides a ground for this coil trouble may be this alone.

**GE K 43**

RCA 100, 101 Modulation hum . . . Connect 50,000 ohm non-inductive resistor from antenna post to ground.

**GE K50P, K54P, K60P, K65P.** Shortwave switch does not fall in place when knob is turned . . . Due to falling out of clip which fits into slot on shaft, holding the shaft in place. Leave out clip and, instead, cut a slot in the end of the shaft so that a floor nail can be fitted into the slot. Solder the nail to the shaft. When the switch is turned the nail will fall against either one side or the other side of the protruding bakelite wall, holding the switch in place in either position.

**G.E. L-50**

Dead, low B voltage . . . open 8 mfd tubular voltage doubling condenser mounted under chassis.

**GE 51, RCA 118, 211**

Intermittent hum . . . replace .05 mfd condenser coupling 6B7 grid to volume control.

**G.E. B52**

Weak . . . Check control grid of 6B7 for short to ground. This lead enters the i.f. shield can at the bottom and often the insulation gets cut.

**GENERAL ELECTRIC K52**

Volume decreases a short time after set is turned on. Especially troublesome when new set of tubes are installed. . . . Replace 27 AVC tube (center rear of chassis) with 56.

**GENERAL ELECTRIC A54.**

Oscillation or distortion at low frequency end of broadcast band when tone control is in high, counter-clockwise, position and not when it is in low . . . May be due to open in capacitor C27 or high resistance solder joint to this condenser.

**GE C60**

Some of these auto sets have leads brought out to five lugs on the antenna coil, one is unused. If antenna trimmer has no effect and noise level is high, connect grid lead from variable condenser to vacant lug instead of original connection so that all of the secondary is used.

**GE 61M, RCA 129**

"B" band dead . . . hold soldering iron close to, but not touching coil winding until wax melts and flows. Retouch all lugs on coil with soldering tip. Allow to cool and realign.

**GE K62, RCA R11**

Motorboating . . . Connect a .1 across the resistor mounted inside the antenna coil.

**G.E. 63, 65**

Intermittent on one band only. . . . Small insulating ceramic bushing on band switch broken. These bushings are held into switch by pressure and may be replaced easily.

**GENERAL ELECTRIC A63, A65.**

Distortion . . . Open or partly open 6F5 plate resistor, R8 in diagram, 250,000 ohms.

**G.E. A63, A65**

Distortion and low volume . . . shorted or leaky .03 tone control condenser.

**G.E. F63**

Distortion on strong signals. . . . Resistor (R3 in diagram) conducted to wrong lug on terminal strip.

**G-E F63**

Antenna coil burned out . . . . defective wave band switch which goes beyond stop position and places 98 volts on the winding.

**GE F 63, 65, 66**

A squeal rising in pitch as volume control is advanced often results when primary leads are reversed on a replacement transformer.

**G.E. F63, 65, 66**

Pointer does not move when dial knob is turned. . . . Not enough friction in drive assembly. Insert small fibre or cardboard strips between pressure plates.

**G-E F63, F70**

Due to the inverse feedback used in these sets a squeal will sometimes develop when the output transformer is replaced. This may be corrected by reversing connections to the transformer.

**GENERAL ELECTRIC A64, A66, A67.**

Severe a.c. hum . . . Accidental contact between high voltage a.c. terminal of the 5Z4 tube socket and the electrostatic shield of the cartridge by-pass condenser C23 causes a hum unlike poor filtering.

**G. E. K-64**

Motorboating and cutting out . . . replace 600 ohm first r.f. bias resistor.

Oscillation . . . Check double 4 mfd electrolytic.

**GE A65**

Hum and distortion . . . insert 50,000 ohm resistor in series with 6C5 plate resistor at the B plus end. Bypass junction of these resistors with .1 mfd. or larger 600 volt condenser. Distortion is sometimes caused by defective 50,000 ohm plate load resistor.

**G.E. A65**

Weak or dead, 2,000 ohm plate dropping resistor burned . . . replace .05 mfd bypass in grid circuit of 6K7 i.f.

**GE G65**

Oscillation and distortion . . . .012 mfd condenser from plate of 6K6G too close to yellow automatic tuning lead causing feedback to control grid of 6A8G.

**G.E. M65**

Oscillation when volume control turned on full . . . Check all filter condensers. Replace 8 mfd section with red leads with new unit.

**GE A66**

Static but no reception . . . oscillator not operating. If new 6A8 tube does not restore action, replace .05 mfd condenser bypassing the 40,000 ohm grid resistor.

**GENERAL ELECTRIC A67.**

Noise, resembling interference gradually becoming distortion . . . Defective 500,000 ohm, 6F6 grid resistor. Sometimes hard to locate as it measures correct value when set is turned off.

**G. E. A-67**

Poor tone and distortion . . . change output grid resistor from 500,000 to 150,000 ohms.

**G.E. A67**

Dead. . . . test condenser shunting candohm resistor for short.

**G. E. E71**

Dead . . . check second i.f. plate bypass condenser (.02 mfd) for short. Also check 2200 ohm plate dropping resistor by removing second i.f. coil shield.

No volume . . . replace 2200 ohm second i.f. cathode resistor.

**GE F74**

Intermittent low frequency motorboating . . . tighten all i.f. cans.

**GE A75**

Fade-out after 15 minute warmup . . . Check .01 mfd condenser in avc lead of i.f.

**G.E. F75**

Noisy when tapped. . . . Louvre dial not properly grounded. Suspect copper ribbons at points where they are spot welded to chassis.

**G. E. 76**

Dead on broadcast band . . . shorted .01 mfd 200 volt condenser connected to shaft of all-wave switch by green wire. Replace with 600 volt condenser.

**GE J80-RCA R8**

Crackling and weak reception . . . first audio primary. There are two transformers sealed in can, no room to mount another. Change to resistance coupling. Substitute 100,000 ohms for primary and 300,000 for secondary, couple det. plate to audio grid through .05 condenser.

**GE K80X, K80, K85.** Failure to operate at high-frequency end of "C" and "D" bands, or even failure to operate over these bands at all . . . Try several new 2A7's in oscillator socket. Oscillation howl on strong signals . . . Enclose grid lead of 2B7 second detector inside cylindrical tube shield.

**G.E. E81**

Distortion, low volume after 10 minutes of operation, plate voltage on 6L6 drops to about 25 volts . . . 6L6 shorted internally to shield. Replace with similar tube or 6L6G.

**G.E. E81, E86**

Loud background noise . . . Change cathode resistor of 6K7 first i.f. to 25000 ohms.

**G-E E81, E91**

High noise level between stations may be reduced by inserting a 5000 ohm half watt resistor bypassed with .05 mfd condenser in the cathode of the first detector and last i.f. stage.

**GE M-81, RCA 143**

For a gradual loss of pep and volume on this set be suspicious of the grid resistor and filter network on the 56 tube amplifier stage. Changing of the condenser will work wonders in some cases. (There are two models of this set—information applies to model with divided or two resistor grid network.)

**G-E A 82**

In this receiver extremely noisy operation over the broadcast range and intermittent operation over the short wave ranges may be caused by an open by-pass condenser from the R.F. circuit primaries to ground. It is necessary to remove the entire "sentry box" assembly in order to reach the condenser. Sometimes it is necessary to increase the value of this particular condenser to as much as 0.5 mfd. before the noisy condition can be completely eliminated.

**G. E. A-82, A-87**

Weak . . . The fixed padder (C-46) across the secondary of the second i.f. transformer should be 65 mmf. In a few instances this condenser has changed value sufficiently to throw this stage out of alignment. The trimmer (C-45) will not peak and all signals will be weak. Replace C-46 with another 65 mmf. capacitor.

**GE J83.** Fading . . . Replace 50,000-ohm resistor under r.f. coil with a 60,000-ohm unit and resolder all oscillator coil connections.

**G.E. A-85**

Low volume or no reception . . . check voltage across 3000 ohm first audio cathode resistor. If less than 2 or 3 volts replace electrolytic bypassing this section with 5 to 10 mfd. 25 volt unit.

**G. E. 86**

Static but station cannot be tuned in. . . . Shorted condenser in sentry box under 6A8 tube. To replace, unsolder all leads on sentry box, remove front dial screws, lift up dial assembly, pull out band shaft, remove front section of sentry box from bottom.

**G.E. A87**

Weak or dead . . . check for shorted .05 condenser and charred 2000 ohm resistor inside second i.f. can.

**G.E. E91, E95, E101, E105, E106, R155**

High noise level . . . break cathode connection of 6K7 first i.f. and bias through 10,000 ohm half watt resistor. Bypass with .05 mfd. condenser.

**G.E. G97**

Pushbuttons stick at either end of dial. . . . Loosen tension spring fastened to latch bar at the end of the switch.

**GE 105**

Weak, no colorama tuning. . . . Replace 5Z4 rectifier.

**G. E. 105**

Off calibration . . . check afc. 6J7 and 5Z4 tubes before adjusting trimmer condensers.

**GE J100, J105.** 10 mike capacitor with yellow lead to lug on volume control opens, causing oscillation . . . When replacing watch polarity as ground is positive in this circuit.

**GENERAL ELECTRIC F107, F135**

Loud noise when station is tuned in by means of buttons. . . . Contacts of switch not opening in proper sequence; center contacts (motor) should open first, contacts farthest from armature (A.F.C.) second, and contacts nearest armatures (silent tuning) should open last.

Skipping of stations. . . . Backstop for relay armature should be adjusted so that a potential of 4.5 volts is sufficient to snap relay closed. The backstop must make positive contact with armature when relay is open. If the relay will not close at 4.5 volts and still maintain proper travel and sequence, weaken the spring holding armature open.

Hum when relay is energized. . . . The pole-piece of the relay is divided to form two semi-circles. The relay armature should touch only the semi-circle nearest the motor shaft. There should be a 10-mil clearance between the other segment and relay armature when the relay is energized. Bending the entire armature support may correct this condition otherwise the pole-piece should be filed down. Hum may also be caused by a bump on the segment with which the armature comes in contact. This may be removed by filing. Be sure all filings are removed after adjustments have been made.

After any adjustment on relay, sequence in which contacts open should be checked to open in order indicated above.

Motor hums but no torque. . . . Shorted motor capacitor, 1000 mfd. 12 volts, A.C. working voltage.

Motor inoperative. . . . Center contacts on relay not making good contact.

Defective motor reversing switch.

Cold solder connection on motor reversing switch.

Open or shorted coil in motor, characterized by no torque or low torque in one direction.

No action when button is pressed. . . . Push button escutcheon grounded to chassis of set. This trouble is usually caused by control shafts touching escutcheon. Centering chassis in cabinet or placing fibre sleeves on shafts will remedy this trouble. This trouble is characterized by the relay remaining closed.

Motor scans but does not stop at desired station. Contacts at the rear of the button shafts do not make good contact. Adjust by bending contacts.

Motor scans but stops at wrong station. Contacts at the rear of the button shafts touching, or, shaft is touching contact. Adjust by bending contacts.

Motor-boating when station is tuned in by means of buttons. . . . A.F.C. out of line, adjust hex nut on A.F.C. transformer, until "pull-in" is equal on both sides of station carrier.

Belt slips. . . . Loosen 2 screws holding motor to support and lift motor higher, tighten screws.

Low frequency stations weak or inaudible, higher frequencies normal. . . . Shorted 580 kc. padder.

Excessive hum, volume control off. . . . Reverse voice coil leads on speaker. Make sure both contacts for plates of rectifier (5Z3) are making good contact.

**GM 50 SERIES.** Volume weak, plate voltage low . . . Look for leaking or shorted r.f. plate condenser. It is generally the top one in the 3-pile assembly that goes bad so don't unsolder the others until the top one is tested.

**GE M106.** Sensitivity poor on short-waves all or part of time . . . Check r.f. and detector condensers by-passing coil returns to ground. Dial slips on fast speed knob setting . . . Remove chassis and bend down three contact springs on tuning knob shaft.

**GE F-107**

For intermittent operation of this set check the pilot light socket and bracket assembly for shorts.

**GE F-107**

Unsatisfactory operation of the automatic tuner unit on some of the earlier models is caused by a slipping drive belt. A small hole drilled through the back corner of the motor base plate and a tapped hole into the chassis will enable a small screw and spring to be used as a belt tighting unit to secure the proper tension.

**GENERAL ELECTRIC J107.**

Stuttering, volume same as when avc tube is pulled out . . . Replace C38, C21, C19, C36, C35. These are, in the same order, 10 mikes at 200 volts, .5 at 600, .1 at 600, 10 at 400 and 10 at 400. Trouble is due to high resistance short between capacitors.

**GE 118.**

Continual frying noise with volume control either at minimum or at maximum . . . Frequently due to induction from the a.c. transformer leads running under the resistors. Using an insulated screwdriver, move the leads down or out until the noise stops.

**GM 120, 130.** Hum, reception normal . . . Replace .1 mike condenser located under a.c. terminal strip.

**G.E. A-125**

High sensitivity, crackling, no avc . . . . shorted .05 mfd on screen of 6K7 avc amplifier stage. This is a 200 volt unit, replace with higher voltage rating.

**G. E. E126**

Insensitive . . . look for shorted .05 mfd bypass in plate circuit of 6L7 mixer. Also burned 2200 ohm resistor inside first i.f. transformer.

**GE F135**

Automatic tuning inoperative, manual tuning normal . . . tap relay on left front side, looking at chassis from rear. If still inoperative, clean and adjust relay contacts.

**G.E. 155**

Motorboating, normal operation for a few minutes then a thump followed by poor quality. . . . Look for poor ground connection of triple section condenser in corner close to 6L6 tubes. This connection is under a group of bypass condensers and is welded instead of soldered.

**G.E. E155, E126**

Noisy volume control. . . . Before replacing volume control, replace 6C5 first A.F. In models E86, E95, and E105 try replacing 6F5 first A.F.

**GE 1937 MODELS**

Pilot light burnouts . . . insert 150 ohm resistor in centertap of high voltage winding, also 15 ohm resistor in series with colorama lights. This offsets high line voltage.

**G.E. 1937 MODELS**

Colorama lights burn out . . . insert a 150 ohm resistor in the centertap of the high voltage winding. Also, a 15 ohm resistor in series with the lamps will increase their life.

**GE 1937 AUTO RADIOS**

Periodic distortion at low volume . . . check for trouble in power tube socket as wax from r.f. .1 mfd bypass runs in tube prongs. Erratic operation in these sets is often due to a defective discriminator-transformer winding.

**G.E. COLOR TUNING**

Due to the series wiring of the three green bulbs, one defective bulb will cause the system to be inoperative. When replacing bulbs make sure the new bulb is of the same current rating. If the green lights are on constantly the trouble can usually be traced to a defective rectifier.

**GENERAL ELECTRIC (RADIO-FORTE)**

If tuning motor seems to lose power, look for weak 60 mfd. electrolytic across motor winding.

## GENERAL MOTORS

**GM.** ***Where tone quality of models using horizontal tuning dials is bad although plate potentials on final 45's checks O.K. do not condemn the push-pull transformer. Look for a defective tone control variable resistor. Replace it with a 500,000 ohm unit.***

**GENERAL MOTORS 110**

Mushy tone. . . . Replace 250,000 ohm detector load resistor.

**GENERAL MOTORS 251**

To prevent cross modulation on strong signals install a shielded lead from the antenna post to antenna coil. Also switch the lead from the antenna coil to the lug next to the coil, using the former lug to connect to the oscillator condenser.

**GM 120, 130, 140.** Intermittent drop in volume but set does not go dead . . . Tighten screws holding stator plates on gang condenser. Both top and bottom screws should be tightened. Or, solder wire lead between top and bottom lugs. Same trouble common in other sets, such as U. S. Radio 27, where grid lead is connected to one side of stator plates and coil is connected to opposite side.

**GENERAL MOTORS 120, 130, 140.**

Weak reception or dead set in serial numbers below 29100A or 1700B, all voltages, condensers and resistors apparently ok . . . Strap a 200 ohm, 10 watt resistor across the 240 ohm section of the voltage divider used for bias to decrease control grid voltage of tubes and snap up sensitivity.

**GENERAL MOTORS 601574**

Tubes light but vibrator is dead . . . . remove power transformer from can. This will disclose an oblong condenser, part number R11549DX, connected to the "A" line choke. Replace this unit.

**GENERAL MOTORS—LITTLE GENERAL**

Intermittent oscillation or fading. . . . Check all resistors and condensers, ground variable condenser rotor.

## GOODYEAR WINGS

**GOODYEAR-WINGS**

Distortion, dead . . . defective tone control on lid of set. Set returns to normal when lid is removed. Replace control and condenser connected to it.

## GREEN FLYER

**GREEN FLYER PHONO MOTO (6 volt)**

Uneven speed, especially in cold weather . . . . wash out all grease with gasoline and lubricate with light oil. Rearrange field coils as illustrated in the accompanying diagram. This increases the field current giving greater power. Crossover connection of fields must be used so that fields do not buck each other.

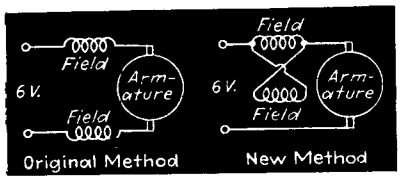


## GRUNOW

**GRUNOW.** Capacity of condensers marked only with part number:

| NUMBER | CAPACITY | VOLTAGE |
|---|---|---|
| 28717 | .002 | 700 |
| 28719 | .004 | 700 |
| 28720 | .005 | 700 |
| 28721 | .01 | 500 |
| 28722 | .04 | 400 |
| 28723 | .05 | 400 |
| 28726 | .1 | 400 |
| 28729 | .5 | 100 |
| 28876 | .02 | 500 |
| 29135 | .1 | 100 |
| 29170 | .017 | 500 |
| 29453 | .01 | 400 |
| 29564 | .075 | 100 |
| 29567 | .02 | 400 |
| 29662 | .15 | 200 |
| 29812 | .04 | 500 |
| 29813 | .004 | 700 |
| 29818 | .003 | 700 |
| 29990 | .02 | 400 |
| 30143 | .05 | 100 |

**GRUNOW 4B**

Distortion which shows up after 5 to 10 minutes of operation . . . replace .02 mfd. coupling condenser part #29567.

**GRUNOW 5E**

Motorboating, intermittent . . . Replace part No. 28726, a .1 mfd 400 v. plate filtering condenser.

**GRUNOW 6C, 6D**

Distortion . . . a.f. coupling condenser leaky. As a matter of routine it is advisable to replace this condenser regardless of complaint.

**GRUNOW 6C**

Loud hum . . . suspect open condenser connected between junction of two 250,000 ohm resistors in the grid of the 42 and ground. Replace with .075 mfd unit.

**GRUNOW 6D**

Hum . . . Late models used 12 mike condensers across the 6000-ohm bias resistor connected to 75 cathode. In early models this was omitted and hum developed later. Install low voltage 12 to 20 electrolytic. Voltage is only 2 or three volts across the bypassed resistor.

**GRUNOW 6D**

Motorboating when volume control is turned to reduce volume . . . replace 1 mfd condenser connected to low end of volume control (end with black unshielded wire) and ground.

**GRUNOW 6D.**

Intermittently refuses to start once it is turned off . . . Replace 75.

**GRUNOW 7-A.** Volume drops intermittently but set does not go completely dead . . . Check two .1 mike condensers connected between lower end of r.f. coils and ground. Located in small can fastened to bottom of coil shields. Lugs on the can are blanks. Connections made by wire leads inside shield.

**GRUNOW 7A.** Intermittent or no reception . . . Common cause is defective .1 condenser in block back of tuning gang, identified by green lead which, with two red leads, is connected to a common terminal at the left rear of the shortwave switch. Use a 600-volt replacement. Also replace 1,000-ohm resistor located nearest filter condensers on resistor bank, as this is usually ruined by failure of the condenser described above.

**GRUNOW 7A.** Motorboating and blocking . . . Due to two large square coil shield cans mounted together under condenser gang working loose. Ground with heavy wire from each can to chassis.

**GRUNOW 8A**

Low volume, high plate current on output tube . . . Low resistance short of the output tube's bias resistor due to leakage from filter condensers through fibre protective covering to close-fitting can.

**GRUNOW 11A**

Distortion after 15 minutes operation . . . check coupling condenser between 85 second detector and 76 push pull drives.

**GRUNOW 11A.** Oscillation . . . Drill out rivet used for mounting shield and socket of 6C6, replacing the rivet with a 6/32 brass machine screw. The placing of a soldering lug under this screw on the underside of the chassis and grounding of this lug to chassis does the job without disfiguring the radio.

**GRUNOW 11G**

Dead . . . 0.1 mfd. tubular condenser, (part No. 29,135) bypassing screen of 6K7 in first I.F. stage, shorted.

**GRUNOW 11G**

Dead . . . Check .lmfd screen by-' pass. Replace with 600 volt type.

**GRUNOW 500**

Although not shown in the factory diagrams some of these sets have a hum bucking coil in the speaker. When a set has no plate voltage check the speaker windings as sometimes a flash occurs between the field and this winding, destroying the leads to the field coil.

**GRUNOW 542**

Inoperative on short waves, broadcast normal . . . touch control grid of 6Q7 with switch in short wave position. If no signal, replace .02 mfd. bypass from one leg of switch to ground with 600 volt type.

**GRUNOW 660**

Mushy reception . . . .01 mfd. coupling condenser between plate of 75 and grid of 42 leaking. Resistances as high as 5 to 10 megs is sufficient to impair reception. Replace with 600 volt type.

**GRUNOW 660, 661, 662**

Weak or no reception . . . test 0.02 mfd. condenser, bypassing plate supply of 6D6 r.f. stage, for short. 2,000 ohm, ¼-watt resistor in plate circuit of same tube also likely damaged if condenser defective.

**GRUNOW 660, 661, 662.** Bad distortion when volume is advanced . . . Suspect high resistance leak in .01 audio coupling resistor, sometimes of the order of 5 megohms. A neon tester will catch this trouble but an ohmmeter will frequently pass it up unless used on an extremely high range.

**GRUNOW 901, 902**

This receiver employs a 6B7 in an unorthodox a.v.c. circuit. Special manufacturer's instructions must be followed in order to correctly align the set. In adjusting the a.v.c. trimmer on the underside of the chassis, located between the two pairs of i.f. trimmers, the correct adjustment is between the two peaks obtained on the output meter when the a.v.c. trimmer is turned counter-clockwise from the maximum.

**GRUNOW 1101.** Volume on full all the time, no control . . . Replace remote control cable or remove short between blue wire and metallic shield over black wire. (IF 262 kc.)

**GRUNOW 1191**

Tuning indicator tube short lived . . . open plate circuit of this tube and insert 50,000 ohm ½ watt resistor. This keeps plate voltage at safe value.

**GRUNOW 1191, 1291**

Low volume, volume control ineffective except in extreme off position . . . high resistance short in control. Oil from shaft has leaked on element.

**GRUNOW 1191, 1291**

Set dead but tuning eye operates . . . Check for open 205 ohm 6F6 cathode bias resistor. .

For high pitched tone check speaker terminal strip. One lead from output transformer broken.

**GRUNOW 1291**

Part of dial dead . . . dial shorting one lug of volume control.

**GRUNOW 1291**

Intermittent oscillation and motorboating . . . open screen bypass on 6J7. Replace with .1 mfd. 400 volt unit.

**GRUNOW 1541**

Dead, except for strong locals . . . look for open acoustic filter choke in plate circuit of 6R7.

**GRUNOW 1937, 15 TUBES**

Peculiar hum which develops after few minutes of operation . . . connect shell of large speaker to ground.

## HALSON

**HALSON AC-DC**

Difficulty in obtaining dial lights for these and similar sets using the pilots in series with tube filaments . . . Shunt 25-ohm resistor across pilot socket and replace bulb with 6-8 volt pilot. Set will thereafter continue to operate even though pilots burn out.

**HALSON N.S.40**

Burns out 25Z5 and pilot light . . . replace 25Z5 socket which has blown over to ground. Pilot light is the 2.5 volt variety.

## HOWARD

**HOWARD 67**

Low volume and poor quality . . . High resistance leak in 0.25 condenser by passing 6F5G plate resistor to ground is most common cause.

**HOWARD 67, 77**

Weak . . . look for short between positive leads of filter condenser. This shorts speaker field.

**HOWARD 200**

Dead . . . look for shorted .1 mfd 200 volt condenser from 6K7 screen to chassis.

## HUDSON

**'34 HUDSON.** Noise suppression . . . Install a dual condenser on the generator, one directly on the temperature indicator at the radiator, another directly on the oil gauge connection at the bottom of the motor pan and also one on the gas gauge directly on the top of the tank. This can be reached back of the rear seat as there is a door for access. Also use condensers in the dome light lead and coil supply lead right at the coil. It is also frequently necessary to shield the high tension lead from the coil right up to the fire wall. And the low tension lead from coil to distributor should be removed from the spark plug duct and shielded.

**HUDSON TERRAPLANE SETS**

When installing auto sets in this car an annoying intermittent buzz is often present while the motor is running. Motor noises are carried and radiated by the gas line. A condenser from the gas line to chassis would not remove the trouble.

A satisfactory solution is to ground the gas tank as a fabric insulates it from the hanger. An easy way to do this is to wrap a piece of copper braid around the insulating fabric and clamp the tank back in position.

**INTER OCEAN P-71**

Weak erratic. . . . Open .1 mfd condenser from screen of 24 tube to ground.

## INTERNATIONAL

**INTERNATIONAL J.** Hum . . . Test for defective resistor connected to plate of second detector 24 and in series with 60,000 ohm resistor to screen of 35 r.f. tube. Replace with 500,000 ohms if defective.

**INTERNATIONAL KADETTE.** Voltages normal but no reception . . . Insulating washers between gang condenser and chassis often slip, allowing condenser to short. Loosen screws, reset washers and tighten.

## KADETTE

**KADETTE K634**

Present wave trap is not sufficient to stop code interference. Disconnect wave trap entirely and connect it's coil in series with red wire from band switch to antenna coil. Connect it's trimmer directly across trap coil.

**KADETTE 1019**

Takes too long to warm up, poor tone. . . . Condenser pack leaking to chassis, replace whole pack.

**KADETTE 1200, ST. REGIS 2200**

Hard to align, distortion on locals, several images on high end of band . . . No a.v.c. wire in r.f. stage. Cut grid return to a.v.c. network between .5 and .1 meg resistors. Realign at 488 kc.

Intermittent . . . check condenser between diode load and high side of volume control or between 6C5 plate and 6F6 grid for open.

**KADETTE 1200, 2200**

Distortion on strong locals . . . no a.v.c. is incorporated in original wiring causing first detector to overload. Insert .0001 mmf condenser between grid of this tube and condenser gang. Also connect 2 meg. resistor from grid to ground and 1 meg. from grid back to i.f. transformer side of second detector load resistor. This procedure will supply an a.v.c. voltage to first detector.

**KADETTE**

Common trouble is usually the failure of the dual .5 mfd condenser; this is caused by the heat generated by the line dropping resistor. Replace resistor with 290 ohm line cord.

## KELLOGG

**KELLOGG 523, 526**

**Hum . . . Connect a .02 600 volt condenser from high voltage contact on 80 tube socket to ground. Try both contacts as one is more effective than the other.**

**KNIGHT B-10563**

Noise which disappears when set is removed from cabinet may be due to dial escutcheon rubbing against tinfoil inlaid dial. Ground escutcheon by running wire from it to chassis.

## LAFAYETTE

**LAFAYETTE MB3**

A continual crackling noise, covering weak broadcast stations and short waves . . . replace volume control with ½ meg linear control.

## L'TATRO

**L'TATRO 32 VOLT SETS**

Low volume, vibrator buzzes . . . check the condenser across the plates of the 84 rectifier for leak or short. This condenser is located directly under the 84 socket and is covered by a tin shield. Remove the shield and condenser; replace with .006 1500 volt unit.

## MAJESTIC

**MAJESTIC 9P3**

Detector plate choke frequently opens . . . Can be replaced with a 25,000 ohm, 1-watt resistor.

**MAJESTIC 15**

Weak or dead . . . open second i.f. coil.

**MAJESTIC 15**

Dead . . . try a new 24A tube in the oscillator socket. Some tubes will oscillate strongly, while others not at all.

**MAJESTIC 15**

Irregular volume, dead spots . . . replace G51 tube with '24 and ground cathode.

**MAJESTIC 15**

Dead . . . check .1 mfd. condenser in plate circuit of oscillator-detector. If this is shorted it burns the 2000 ohm plate draping resistor.

**MAJESTIC 15.** Set dead although voltages check ok . . . Place blanket over back and let run from 3 to 4 hours.

**MAJESTIC 15.** Operates satisfactory only at certain positions of the dial . . . Try changing first detector-oscillator cathode resistor to 5,000 ohms, instead of the original 10,000. The tube is probably overbiased.

**MAJESTIC 15, 55**

Restoring lost sensitivity . . . Connect fixed condenser of about .0005 between the two stator sections of the pre-selector and tuning sections of the gang condenser. In other words, between the grid of the first tube and the secondary of the pre-selector coil. Realign.

**MAJESTIC 20.** Section of voltage divider heats excessively . . . Probably a shorted .1 mfd. bypass condenser in the intermediate transformer. Connect new unit externally.

**MAJESTIC 20.** Continuous sizzling . . . Open chassis at left side from rear (tone control side) by taking out side flap. (Bottom cannot be removed without unsoldering chokes.) Clip tone control condenser lead. Although switch cuts this out many users don't know it is a tone control and it is usually jammed on low tone shortly after the purchase. Replace, if tone control is used, with 03 mfd., 600 volt tubular.

**MAJESTIC 20.** Testing with separate meters . . . Cut loose 3 wires on end of chassis running to by-pass condensers. Solder 8 inch jumpers between ends of severed leads. Then clip the string cabling these leads and the bottom can be pulled far enough away to give complete access to voltage divider and other parts.

**MAJESTIC 20**

Weak or no reception, low voltage . . . shorted .1 mfd. condenser in first I.F. transformer can. It is unnecessary to melt tar; remove can and slit on side near red lead. Bend metal back and cut loose offending condenser. Replace can and install new .1 mfd. 600 v. condenser on outside.

**MAJESTIC 44, 49, 194 (CHASSIS 440)**

Dead, with pinkish glow in rectifier . . . high voltage arcs over to chassis from tube prongs of rectifier due to small chassis cutout for socket. Arcing causes socket to carbonize, necessitating replacement. Before removing damaged unit, make six pencil marks around circumference of socket hole. (one opposite each prong hole of socket) Then remove socket, making note when unsoldering leads as to what terminals they came from. Now, with a tapered-blade hack-saw, cut out notches around circumference of hole at points marked with pencil. Make notches sufficiently deep and wide so that when new socket is installed there will be ample clearance between tube prongs and chassis to prevent repitition of trouble. The job can be made neat if the notches are rounded with a small rat-tail file.

**MAJESTIC 44, 49, 194**

Hum, reception blanketed by oscillation . . . open section in 6.4 mfd. electrolytic condenser block.

**MAJESTIC 44, 49, 194**

Distortion. . . . check for open or decreased capacity in electrolytic filter block.

**MAJESTIC 50**

Fading. . . . Check first audio transformer which is condenser-choke coupled.

**MAJESTIC 50.** Replacing dial bulb without removing two knobs, screws and other miscellaneous parts. . . . Remove dial escutcheon held by 4 small nails. Turn dial to 1,500 and remove end screw that holds dial strip. Insert bulb and backtrack process.

**MAJESTIC 50**

Motorboats . . . check .001 mfd grid condenser and 100,000 ohm grid resistor on 27 oscillator for change in value.

**MAJESTIC 50.** Set dead, no plate voltage on second detector but all other voltages only about 15 volts below normal . . . Do not remove bottom plate from chassis. Instead, remove the small plate at back of chassis directly below the deck upon which is mounted the 80 and 45 tubes. Look for a charred 25,000 ohm resistor. Replace it and the associated 1 mike condenser, which has shorted, causing the resistor to burn out.

MAJESTIC 55

Crackling, noisy . . . oscillator primary winding breaking down. Replace with new unit (I.F. 275KC).

**MAJESTIC 55, 15.** Oscillation not traceable to filter condensers or resistors . . . Replace detector coupling condenser behind resistor board rear wall with 05, 400 volt type.

**MAJESTIC 55.** Fading and intermittent reception . . . Usually due to high leakage condensers in block, located on outside of chassis, near speaker. Also check tubular condensers for opens as some have loose ends that cause noise when switch is first turned on.

**MAJESTIC 60.** Set stops playing suddenly, tuning meter pointer swings clear over to stop. Cause is shorting of by-pass condenser in plate circuit of i.f. tube. Unsolder leads from i.f. transformer, remove it from chassis and heat to melt wax. Remove can and melt wax from red lead with iron. Cut this lead, re-assemble the transformer with it projecting from case and mount replacement by-pass unit externally.

MAJESTIC 60

Dead . . . Check for shorting of lead from 80 filament terminal to ground or to the 110-volt line. The rubber covering of this wire softens from heat or the line voltage taps cut through it. The set may test ok when checking with an analyzer and still not play.

**MAJESTIC 60, 70, 80.** To increase sensitivity and volume . . . Place a 250 mmf. mica condenser between the contact arm of the 10,000 ohm volume control and the low end of the variable r.f. coil in the first r.f. stage. Noise will also be reduced by this addition.

**MAJESTIC 66.** Vibrator adjustment . . . Connect d.c. ammeter (0-5 or 0-10, low resistance) in series between pigtail terminal on vibrator and battery wire which was connected to this terminal. Connect 0-300 d.c. voltmeter, 1,000 ohms per volt type, between ground and the B side (red lead) of audio output transformer. Connect 0-100 d.c. milliameter between ground and grounded end of B filter choke (which is first removed from ground). Now, with a good A battery at 7.3 volts there should be 5.7 volts at the vibrator terminals. With normal tubes which have been heated for at least one minute the following values should be read when the vibrator is properly adjusted: Input: 5.7 volts at from 3.8 to 4.1 amperes. Output: 200 volts at 53 milliamperes. If voltage measured at vibrator is higher or lower than 5.7 then the other readings will be correspondingly more or less. Readjustment of the vibrator will be necessary if, for the above input values, the output current and voltage are down or if the input current is over 4.1 amperes.

Vibrators which have seen any appreciable amount of service will not retain readjustment unless the points are dressed or replaced with new ones. Experience has shown that it is much cheaper for the average service man to replace the vibrator head with a new head which has been adjusted and run-in at the factory. In dressing the points remove the armature from the vibrator assembly. In removing the armature, loosen only one pivot screw in order that the other may remain in position and properly locate the armature when it is put back in the frame. Before removing the armature take note of the side play on the pivots as this same amount of side play must be obtained when the unit is reassembled. In reassembling, be sure that the pivots do not bind the armature and that the side play does not exceed .003 in. to .005 in.

A file is practically useless for dressing the contact points, especially for the tungsten on the brass studs. A fine carborundum stone should be used for acquiring a final finish. When work on the contacts is finished they should be washed in alcohol (never use Ethyl gas) as any carborundum dust left on the contacts will cause rapid failure after adjustment.

In disassembling the vibrator unit never disturb the spring tension adjusting screw, as this screw has been set at the factory at that point which will place the spring under a tension of 30 grams. It is very hard to guess what this tension is and if spring gauges for measuring this tension are not available it is apparent that the tension adjustment ought not to be disturbed.

The contact which is opposite from the tension spring is called the primary contact, that on the same side as the tension screw, the secondary contact. In adjusting the vibrator, set the primary contact all the way out so that it does not make contact to the armature. Connect the battery and after the tubes and rectifier are heated, turn the primary down until the armature begins to clatter against the core, then back it off about a half turn so that the clatter stops. Tighten the lock nut on the primary contact and then turn down the secondary until the ammeter reading begins to make an abrupt rise and at this point adjust to 3.8 to 4.1 amperes. Note that a point will be reached in this adjustment at which the output current and voltage do not increase, even though the input current rises as the contact is turned. The point at which input current is a minimum for a standard output voltage, is the point of correct adjustment. Do not attempt to turn any adjusting screw without first loosening the lock nuts and do not try any one adjustment as final without tightening the locknut as tightening the nut is apt to change things. When the vibrator is properly adjusted, clearance of the normally opened contact is .010 in. to .015 in. In attempting to measure this clearance with a feeler gauge one must rely on sight and not feel because if the gauge is thicker than the clearance of the contact, it will force its way in because of the flexibility of the spring on which the lower contact is mounted. If the gap is too small, turn the spring tension screw down a half turn. The armature may now clatter against the core and if it does, turn the primary contact back about one-quarter turn. Recheck adjustment of the secondary contact as described before.

If, on inspection of the vibrator unit, it is seen that the armature spring is badly discolored, it is an indication that the vibrator has been operated under improper conditions, as follows:

A: Tampered adjustment.
B: Incorrect battery polarity.
C: Operated at no load condition.
D: Operated at overload.
E: Operated at too high a primary voltage.

**MAJESTIC 66.** Fuse blows regularly, voltages test ok . . . Look for bad 6Y5. Sometimes test ok in checker but change it anyway. (IF 175 kc.)

MAJESTIC 66

Intermittent, low volume . . . check .03 mfd condenser (C1 on diagram) in the secondary grid return of the antenna coil. This unit frequently opens.

MAJESTIC 66

Low or dead filament circuit . . . high resistance between fuse clips and riveted lugs. Solder each of the fuse clips to their mounting lug.

MAJESTIC 66

Fading, vibrator refuses to function, pilot light still lights. . . . Examine fuse holder for corrosion.

**MAJESTIC 66.** Troubles due to wetting through cowl ventilators, water entering set through ribbed cover openings . . . Check screen voltages by listening for clicking sound which should be heard when contacting control grid of i.f. tube. If not heard check wire-wound 10,000 ohm resistor in series with screens of r.f., oscillator and i.f. tubes located directly above oscillator socket on under side of set, rivetted to chassis sidewall. Look also for electrolysis on red lead going into B choke which opens up soldered joint inside choke. Symptom is high-voltage on control-grid of 89. This will cause slight shock when fingers are placed from grid to chassis. Cut into first layer of choke insulating paper if repair is necessary and re-solder joint. Wetting also causes rectifier socket terminals to arc to chassis and carbonize, necessitating new socket.

**MAJESTIC 66.** Normal voltages, vibrator ok but set don't play . . . Try removing shield of i.f. coil, placing insulating paper around coil frame.

**MAJESTIC 66.** Intermittent operation when car is operated over rough roads . . . Look for broken shielded ground wire leading inside of plug at rear of set. Take off plug and unscrew, soldering wire.

**MAJESTIC 66.** No screen voltages. Check 10,000 ohm resistor just below 6E7 and 6C7 and if burned out replace with one having higher wattage rating. Plate and screen voltages below normal. Check center tapped filter choke (underneath set about and inch away from the A battery female cable connector). If grounded side is open or partially open there is no grid return to ground for the output tube and lack of bias boosts plate current to point where drop through choke becomes abnormally great.

**MAJESTIC 66.** Installation hints . . . To greatly reduce motor noise pick-up conducted to chassis by pilot light lead, make it easier to remove the set, permit the use of the set without the pilot light burning in daylight proceed as follows: Before making the installation remove the remote control pilot light feed wire from the chassis by unsoldering it inside or cutting it off just outside the case. When the remote control unit has been mounted connect the pilot lamp wire to the tail lamp post on the lighting switch by holding wire to each post and snapping switch through its various positions.

**MAJESTIC 66.** No reception, voltages ok. . . . Look for open grid return condensers across the 300,000 ohm a.v.c. resistors (marked C1 and C2 on manufacturer's diagram). These are the small tubular type of .03 mfd. condensers found hanging across the first two r.f. coils. They open, due to vibration. Excessive current drain, vibrator works erratically . . . Change "Globar" resistor across vibrator transformer secondary. Testing B voltage . . . Bottom cover need not be removed. Simply put plus end of meter to the i.f. trimmer condenser terminal on top of set. Reception ok with cover off, distorted with cover, especially on low volume . . . Tap metal spider of speaker lightly downward, recentering cone. New sets sometimes come through bad as they are tested at the factory with the cover off and then packed. Set alive from grid of 6C7 only, dead from preceding tubes . . . Look for open second i.f. transformer secondary. Squeals and oscillation on lower wavelengths, from about 1,100 kc. up . . . Change 6A7. The tube defect will not show up in a checker.

MAJESTIC 66 AUTO RADIO

One side of rectifier tube not working . . . adjust the vibrator carefully according to original directions so that both plates handle equal load.

**MAJESTIC 70.** Dial cable replacements are easily made if the proper template is used. Cut a 36 in. length, 4 in. wide from ¼ to 1 in. thick board. Drive a wire nail almost home in the exact center of the broad side and one near each end, 15¾ in. from the center. Lay a length of suitable cable material alongside the nails and form and solder two single and one double loops around the nails to match the anchor pins on cable sheaves.

**MAJESTIC 70.** Fading . . . Don't trust plier-tightened knurled nuts on powerpack terminal strip. Remove top strip and tighten all hexagonal nuts on the bottom mounting. If these are loose screw heads underneath will not make contact with lugs. Open a.f. 26 bias resistor . . . remove knob from hum control at rear of chassis. Remove nut holding hum control and insulating bushing. Replace without insulating bushing and set will play with good volume but bad hum. Sell customer replacement control job. Intermittent buzzing . . . Generally a cathode to heater short in 27 tube, when heated.

**MAJESTIC 70.** Holding dial shaft from turning while replacing cable . . . Fasten one end of the new cable to its spindle and wind it until the dial is tight against its stop. To hold it there, while the other end of the cable is being adjusted, clamp a small Stillson wrench to the tuning shaft on the outside of the chassis and brace the wrench handle against the volume control shaft.

**MAJESTIC 70B.** No grid reading on 71's . . . Check pilot light socket. It frequently shorts to ground.

MAJESTIC 70, 71

Weak, intermittent . . .Look for a fungus growth or mould on fabric insulation of R.F. wiring, no rubber under fabric of wire. Rewire with rubber and varnished cambric insulated wire.

MAJESTIC 71, 72

Dead . . . look for open windings in audio transformers in these early electric receivers.

**MAJESTIC 70, 90.** Frying noise, sounds like noisy audio transformer but is not . . . Often due to corroded and loose leads in the ballast unit. Take cover off, loosen resistance wire leads, clean them well and replace, tightening contacts well.

MAJESTIC 70, 90

Neutralizing tool on hand too large in diameter to go through condenser adjustment holes at top of chasis . . . Remove hex bolts from neutralizing condensers and saw slits so that they may be turned with an insulated screwdriver.

**MAJESTIC 90.** Set plays for about an hour then fades in volume, though stations are still heard weakly . . . Look for partially shorted r.f. 5 mike condenser located at front of chassis with chassis upside down, on left side.

MAJESTIC 90

Antenna choke tuned by a .001 condenser frequently opens up . . . Can be replaced with the good coil section of a 175 kc., i.f. transformer from an old Radiola 80. Saw through the center of wooden spool and mount good coil in chassis. A hole is already there.

**MAJESTIC 90.** Common troubles are the shorting of the detector filter condenser or opening of the 2,000 ohm filter choke. A 2,000 ohm resistor can be substituted for the choke.

MAJESTIC 90

Loud, irritating buzz occurring at short intervals . . . Frequently caused by poor connection where resistance wire of ballast unit is attached to the prong. Clean and tighten.

**MAJESTIC 90.** "Burping" on dance volume . . . Usually due to poorly matched 45's. Speaker rattle . . . Smear the overlap of the cone with collodion. Sometimes it is necessary to remove the wires which normally hold the overlap in place.

**MAJESTIC 90.** Carrier hum. Remove receptacle plate on floor outlet from which set gets power and fasten ground lead to Gem B box by means of mounting screw. Such a ground is a positive remedy where iron conduit is well grounded.

**MAJESTIC 90.** Violent oscillation, especially on high frequencies, when volume is turned up on station . . . Shunt a ¼ to ½ mike condenser across each of the r.f. bypasses located beneath the chassis. These are large, inclosed in tin.

MAJESTIC 90

Lacks pep. . . . Check cable and connections between power pack and chassis. Often sections of this cable are open.

**MAJESTIC 90.** Intermittent reception . . . If complete set of new tubes does not cure this replace 2.5 mfd. condenser located on inside of chassis wall. These open intermittently.

**MAJESTIC 90.** No plate voltage . . . Generally due to shorted filter condenser (2 mfd) in pack, connected from black lead to green lead through 2,000 ohm choke to red lead. Breakdown usually ruins choke. Replace both.

MAJESTIC 90, 100

Cuts off to half volume, squeals at full volume intermittently . . . replace both .5 mfd condenser bypassing cathode bias.

MAJESTIC 90B

Hum, fading . . . . lift rubber covered wires of cable so as to clear 116 ohm non inductive centertap resistor.

# RADIO RETAILING'S "Service Shortcuts"

**MAJESTIC 90B.** Intermittent reception . . . Sometimes defective choke in r.f. lead. To remedy, short out choke. Performance is not noticeably impaired.

**MAJESTIC 90B.** Fading . . . Replace detector cathode bypass condenser. Check 27's.

**MAJESTIC 90B.** No plate voltage, trouble apparently in powerpack . . . Disconnect leads between pack and set, turn current on for 45 seconds.

**MAJESTIC 90, 90B.** Hum, sounds like noise from small motor . . . See that antenna and ground wires have not been reversed, or that ground connection has not gone bad.

**MAJESTIC 90B, 100B.** Noise, motorboating. Generally traceable to defective .5 mfd. r.f. by-pass condenser.

**MAJESTIC 90, 90B, 100B.** Rejuvenating the appearance of the dial . . . Remove all paint with alcohol and wipe the dial dry. Then repaint with black Duco. Let the paint dry and then rub it with fine steel-wool dipped in crude oil. The raised numbers will shine like a new assembly. Where numbers are stamped in with a sharp indentation the paint may be cut out with a knife if a black body and light scale is wanted. Or the dial may be rubbed down, giving a brass body and black numbers. This process can be used on other makes of receiver, for example, the Stromberg 335, 338, 41 and 42 has a stamped dial.

**MAJESTIC 90, 92.** No signal. Check variable resistor located on end of condenser gang. Many sets work better when resistors are removed and loose wire carried to ground.

**MAJESTIC 91, 92.** Motorboating. Inspect flexible lead soldered to sliding arm attached to trimmer cup. After a time this wire wears, breaks.

**MAJESTIC 90, 91, 92.** If analysis shows no detector plate voltage clip the wire between the second and third lugs from the top of the condenser block for a temporary repair with slightly reduced volume.

MAJESTIC 92

Loud hum modulating signal, disappears when station is tuned out . . . remove cover from power pack and connect .1 mfd condenser from ground to one side of a.c. line. Try both sides as one is more effective.

Heavy frying noise in speaker . . . take ballast apart and disconnect long screw running through porcelain insulator, clean top of ballast with sandpaper; also clean screw.

**MAJESTIC 100B.** Ok on phonograph side of switch but n.d. on radio . . . Bare, twisted wire which connects inside the switch to chassis, for ground, breaks. Caused by continuous use of switch. Solder lead from terminal 1 to ground. Switch is numbered from 1 to 12.

**MAJESTIC 100B.** Cutting in an out. Check by-pass condensers across cathode resistors to ground. There are two in metal containers. Replace defectives with 1 mfd. units.

**MAJESTIC 102, 103.** Fading. Traceable to pickup transformer located on right of cabinet midway between shelves supporting chassis and speaker. If cardboard covering one end of unit is found to be warped one of the terminal lugs generally makes contact with the transformer core. Vibration from speaker thus causes trouble. Unsolder the lead from the terminal lug and bring the wire up directly through the hole in the cardboard and resolder in place.

MAJESTIC 116

Weak, checks normal . . . replace G58AS in the second i.f. amplifier stage with a 78.

MAJESTIC 130

Fading, poor sensitivity . . . check .04 mfd condenser furnishing the coupling for the band pass tuner. There are three of these mounted on a vertical upright to which the gang condenser is mounted. Replace all three condensers.

MAJESTIC 130A

Fading . . . Defective .04 condenser bypassing 500-ohm resistor between secondary of last r.f. transformer and chassis. Located under tuning condensers, accessible by removing tuning condenser shield. The resistor is inside the r.f. coil.

**MAJESTIC 130A.**

Flat tone and loss of volume, all voltages correct . . . Check speaker field coil for open. An analyzer will not show this fault if tests are run from the chassis.

MAJESTIC 130, 130-A, 131, 132

No reception . . . test for short in 0.3 mfd. condenser, bypassing plate supply of first and second r.f. stages. Also check 4,875 ohm resistor in same circuit for decrease in value. Recommended ratings of replacement units: condenser, 400 volts; resistor, 10 watts.

**MAJESTIC 200 SERIES.** Generally poor reception . . . R1, a 15,000-ohm, and R2, a 20,000-ohm resistor, both in the voltage divider, connected from plates to screens and from screens to cathode coil of the first detector, change value. Replace with 10-watt type. Also replace entire can containing C5, .03 coupling condenser, .04, a .1 mike first detector cathode bypass and C3, a .25 mike r.f. cathode bypass. Leakage is common between these units and is sometimes of the order of two to three megohms.

MAJESTIC 200

Continual frying noise . . . replace voltage divider ($R_1R_2R_3R_4R_5$).

MAJESTIC 200

Regenerative whistle . . . ungrounded shielding on one of the 51 spray-shielded tubes. Connection to the shield may be made by wrapping a few turns around the envelope and grounding to the cathode prong.

**MAJESTIC 290.** Volume cannot be cut down sufficiently . . . Look for defective 10-mike condenser from cathode of 57 to plate of 58 noise-suppressor tube. Open circuiting is common.

**MAJESTIC 290.**

Inoperative suppressor control . . . Caused generally by leaky or shorted 10-mike, 50-volt condenser marked C-8 on diagram and connected from G57 audio tube cathode to one end of volume control. Distortion . . . If present only when volume control is advanced look for leaky C-10 or C-20 audio coupling condensers.

MAJESTIC 300 SERIES

Dead . . . test for short in 0.25 mfd. condenser, by-passing screen of G-58-S in r.f. stage. Unit is component of by-pass container with lug terminals. Also check center winding of resonance reactor for open.

Signals fade out completely after short periods of operation . . . ½-meg. resistor, connected between cathode and suppressor of G-57-S in first a.f. stage, is likely defective. If short placed across terminals restores operation, replace resistor.

Tuning light inoperative . . . look for short in low voltage, 20 mfd. electrolytic condenser shunted across center winding of resonance reactor. Also note voltage rating of tuning light bulb in use. It should be 2.5-volt type. A 6-volt lamp will light but will not dim on resonance.

**MAJESTIC 300A.** Volume low, peaking at midpoint of volume control setting . . . Replace .1 condenser in square can. This unit has white rubber covered leads and connects between one end of the volume control and the grid circuits of the r.f. and i.f. tubes. Set plays for moment when first turned on but then quickly chokes off . . . Replace .25 condenser in same can as above, one side grounded, red lead.

**MAJESTIC 300.** Whistling and squealing on each station tuned in, also low volume . . . Generally due to open condenser C10, a .1 mike unit in plates of push-pull detector circuit. Replacing original Majestic tubes in i.f. and r.f. circuits with standards . . . Cover glass of conventional tubes with shellac, then stick tinfoil over glass, forming close-fitting shield. Twist piece of bare copper wire over foil just above tube base and attach to cathode of tube.

**MAJESTIC 300**

Overload with volume all on, still not enough volume . . . high resistance leak in coupling condenser connecting to tube side of volume control.

**MAJESTIC 300**

Motorboating when volume is advanced . . . replace 10 mfd electrolytic. C3 in schematic

**MAJESTIC 300 SERIES.** Weak signals, heard only at critical point of volume control . . . Condenser can marked C and D houses two capacitors, C17 a .1 mfd. and C24, a .25 mfd. A leak of one or more megs from C17 to ground or to C24 causes trouble. Ordinary ohmmeters will not detect it. Cut both leads coming out from holes in can marked C and D and connect a good .1 mfd. unit externally in its place. For solution of other troubles in this series check each ½ watt carbon resistor for more than 25 per cent change in value. (I.F. 175 kc.)

**MAJESTIC 310A.** Lack of sensitivity . . . Try placing 20,000 or 30,000 ohm resistor across grid return of i.f. transformer to ground. Cutting in and out . . . Look for high resistance connection between poorly cleaned enameled voice-coil wire and leads.

**MAJESTIC 310-B**

On all sets of this type using i.f. plate feed for automatic volume control, a slight leak will bias the control grids positive, causing them to block. Replace defective condenser with 50 to 100 mmf. mica condenser.

**MAJESTIC 370.** No local reception with grid cap off i.f. tube . . . Cause is generally shorted i.f. coil. Remove it from case, bend back the lug and put a piece of fishpaper between coil and case.

**MAJESTIC 380**

Low volume, hum . . . check G57 AS and G58AS tubes. These tubes cannot be replaced with G57S or G58S. The "AS" series are 6.3 volts at .4 amp filaments.

**MAJESTIC 381.** Poor selectivity, volume. Many men remove the metal shield on the bottom of the chassis. Oscillation is kept under control by proper use of the volume adjustment.

**MAJESTIC 381 (CHASSIS 380)**

Dead . . . if ohmmeter applied between G84 rectifier filament and chassis indicates full scale, 8 mfd. section of 8.4 mfd. electrolytic condenser block is shorted.

**MAJESTIC 400A SERIES.** "Gurgling" variety of hum . . . Replace 6D7 detector with new tube, trying several and choosing best. Intermittent reception . . . Often due to loose filament in 46A or 46B ballast tube. Hitting set shows it up.

**MAJESTIC 400 SERIES.** Low volume despite satisfactory r.f. pickup . . . Check for open speaker field coil, a common failure. No signal from first 57A detector-oscillator, i.f. and other tubes alive . . . Test for grounded i.f. transformer. There should be no reading from control grid of i.f. 58A to transformer can. If there is remove coil from can, wrap with fish paper and replace. Set completely dead from grid of the 43 output tube . . . Nine times out of ten the C-bias resistor in cathode circuit is open. Replace with 700 ohms. Pronounced hum . . . Look for shorted electrolytic across 43 bias resistor.

**MAJESTIC 440, 460.** Oscillation . . . Almost invariably due to defective 6F7, which is critical in this set. Motorboating . . . Open 1 meg. resistor located in grid return of 6F7 triode section and shown on diagram as R9. High-plate voltage on all tubes, no signal . . . Look for open 41 cathode resistor, which should be 500 ohms. Failure of oscillator to work . . . Generally caused by poor soldered joint at third grid return 150,000 ohm resistor associated with 6A7.

**MAJESTIC 460A**

Motorboating and no reception . . . High resistance connection between grid lead of 58 I.F. and lug on I.F. transformer.

**MAJESTIC 500**

Motorboating when tuned off resonance . . . Replace .25 mfd. bypass on 6A7 and 6F7 cathodes. Condensers are in one container of four .25 mfd., one .03 mfd. and one .06 mfd. capacitors.

**MAJESTIC 500**

Inoperative over part of the dial . . . . replace 50,000 ohm oscillator grid leak connected from cathode to grid of 6A7. This resistor often will increase greatly in value.

**MAJESTIC 500.** Poor selectivity . . . Drill hole in top of second i.f. transformer case and mount a balancing condenser in this position, connecting it across the transformer primary. Adjust for maximum selectivity.

**MAJESTIC 500.** Nothing coming through tubes ahead of 42 . . . Look for open coupling condenser, tubular type .05 going from triode plate of 6F7 to control grid of 42. Motorboating, all voltages ok . . . Change 3rd i.f. transformer. Trouble is usually primary to secondary short. Set stops when nearby light is turned on or off . . . Short out a.v.c. 300,000 ohm resistor in grid return circuit of 6A7. Trouble is due to overbiasing of 6A7 by surge, paralyzing its action.

**MAJESTIC 520.** Replacing 25 with easier-to-obtain 19 . . . Looking at bottom of six-prong socket, reading clockwise from filament prongs, connections originally are as follows: Filament, filament, plate, diode, diode and grid. Change circuit connections so that the grid lead goes to the old diode prong immediately next to the plate while the diode lead removed from this prong is carried to the old grid connection. The prongs should now read: Filament, filament, plate, grid, diode, diode. (I.F. 175 kc.)

**MAJESTIC 650**

Noisy, crackling . . . this can usually be traced to poor connections in the second i.f. transformer. A high resistance meter connected across the primary with the receiver operating will show fluctuations. Replace transformer.

**MAJESTIC**

Weak, crackling . . . check spray shield on all tubes to see if shield makes good contact with base pin. If poor connection is found, a small wire wound around tube where the base joins the glass will bond the base pin wire to the shield.

**MAJESTIC.** No signal or signal produced when set is jarred, types having speaker mounted on chassis. Look for broken lead to voice-coil. Vibration frequently breaks these.

**MAJESTIC.** Models using pilot as resonance indicator. Set dead or distorted. Look for open or shorted winding on center leg of indicator transformer in r.f. and i.f. plate circuits. Replace. For temporary repair short out winding by bridging two outside terminals and using 3.2 volt pilot.

**MAJESTIC VIBRATORS.** Notes on adjustment . . . Loosen screws 2 and 3 until there is a fairly large gap between contact points a and b and c and d. Then adjust screw 1 until the distance between points e and f and g and h is equal. In other words, see that the armature balances equally on both sides of the pivot. Now adjust screw 3 until contacts c and d touch, then tighten set nut 3a. Finally adjust screw 2 until there is a small gap between contacts a and b. Tighten set nut 2a and the job is done.

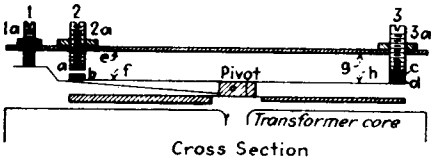

Cross Section

**MARQUETTE 51 (HERBERT HORN)**

Signals accompanied by hissing noise . . . open .01 mfd. plate bypass on 42.

**MIDWEST 11**

Poor operation . . . .05 condenser from grid coil return to ground omitted in diagram and set, install and realign for increased gain. Replace the two ½ watt carbon resistors across the lugs of the speaker socket with 1 watt, orange resistor is 3 meg and blue 6 megs, check .1 mfd connected from their common ground for leakage.

# HEADQUARTERS FOR THE FINEST RADIO TUBES

# AUTHORITATIVE TECHNICAL INFORMATION

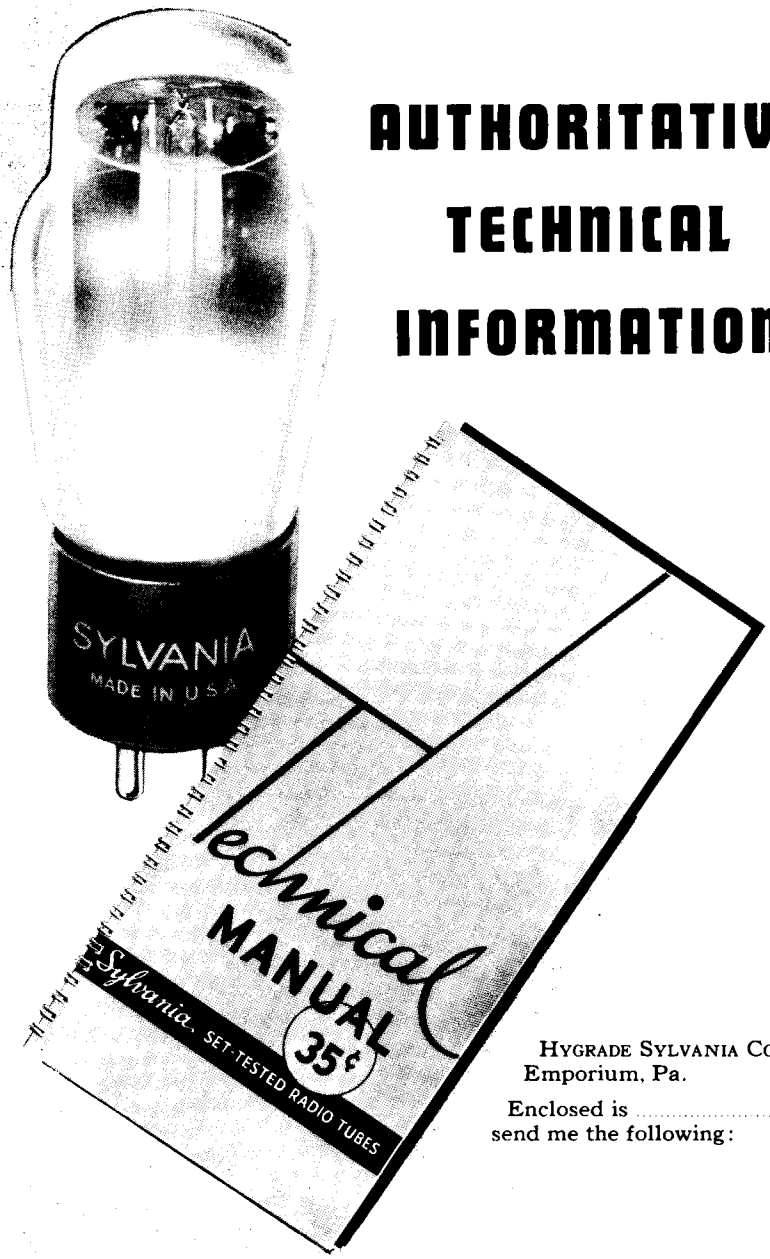


Through its achievements in the development and manufacture of the finest radio tubes, Sylvania has logically become headquarters for authoritative technical information.

Sylvania service to the radio industry is always "at *your* service."

Do you need to know the characteristics of a particular tube type? Do you need diagrams of tube bases? Data on I-F peaks? Would you like hints on servicing?

Sylvania is headquarters for such practical helps as "Characteristic Sheets"; "Tube Base Charts"; "Tube Complement Data"; "Service Hints"; "Sylvania News (technical section)" and Sylvania's justly famous "Technical Manual."

The Sylvania Technical Manual supplies complete data on 374 types of tubes, consists of 272 pages of useful tube information in handy form.

Many of these Sylvania Helps are considered necessities by servicemen, radio technicians, amateurs. Write to Sylvania today for your copies or use the coupon below.

HYGRADE SYLVANIA CORP.,
Emporium, Pa.

Enclosed is ..... Please send me the following:

***SET-TESTED RADIO TUBES***

*Name* .....

*Address* .....

*City* ..... *State* .....

# THERE'S NEVER BEEN ANYTHING LIKE THEM!

## *Third Edition*

## RADIO SERVICE ENCYCLOPEDIA

## THE SUPPLEMENTAL

# MYE MONTHLY TECHNICAL SERVICE

Literally thousands of radio service engineers have acclaimed the 3rd Edition MYE as the greatest reference work ever published in the field. And no wonder! It gives everything you want to know about 23,000 makes and models. All the dope on each set in one book . . . in one page . . . in one line. Again, in one handy book is up-to-the-minute, split-second reference to vital information you need every single working day. It will pay for itself over and over on every job you handle.

### 200 PAGES OF LISTINGS ALONE!

The tremendous increase in the number of different sets manufactured and sold since the publication of the 2nd Edition MYE has made it necessary to devote 200 pages to listings in order to accommodate the 23,000 makes and models you will have to work on. Every listing is complete and even gives the correct Rider's Manual Volume and page number for reference to schematics when needed.

Radio Service Engineers who know they must keep abreast of every current development tell us that any one issue to date would be worth the price of the whole series. It has helped them solve problems not covered by any other service *regardless of cost* . . . and there are still many invaluable issues to come. *You can still get the entire series to date . . . plus the succeeding issues!*

### LOOK AT THE SUBJECTS ALREADY COVERED AND YET TO COME!

The issues already saving time and money for every subscriber contain: (1) Combined Tube Characteristics with complete tube charts. (2) Complete engineering data on Dry Electrolytic Capacitors. (3) Useful Servicing Information. (4) New Receiver listings cover all sets from June to December 1939. (5) Phono-Radio Combinations . . . the most complete compilation ever published. (6) Half Wave and Voltage Doubler Power Supply Systems. (7) Vibrator Power Supplies. And there are still five equally valuable issues to come . . . one each month right through the year. Coming issues will cover Automatic Tuning, Frequency Modulation, Vacuum Tube Voltmeter use, Superheterodyne First Detectors and Oscillators and other equally timely subjects.

**P. R. MALLORY & CO., Inc., Indianapolis, Indiana**

Cable Address — Pelmallo

Use P. R. MALLORY & CO. Inc. MALLORY APPROVED PRECISION PRODUCT!

# READ WHAT USERS SAY!

"I wish to compliment you on the excellent work you are doing and the service you are rendering the Radio Serviceman."
—*Robert F. Jones*
*Springfield, Illinois*

"Send me the MYE Supplements so far published as soon as possible. After seeing them, I think I'm missing out on something."
—*Fred Dumbeck*
*Greenfield Park, Quebec*

"I have received the supplement that goes with the third Mallory manual. I have used the other two manuals and I have found them very useful, but the third edition and the supplements that go with it seem to me like the most complete information that can be procured at any price."
—*Frank Audette*
*Worcester, Massachusetts*

"We have all three of your MYE Encyclopedias and wish to say that all the information in them is very definitely valuable."
—*Oliver B. Hill*
*Moscow, Idaho*

"I have found all three editions of MYE invaluable to me."
—*R. R. Ferris,*
*Detroit, Michigan*

"I have 2nd and 3rd Edition of your Encyclopedia and wouldn't trade it for any other. I use it constantly for reference."
—*Edison B. Leeds*
*New York, N.Y.*

"I find each Supplement just as you said they would be. They are needed every day in my line of radio work. I can't get by one day without looking into them. I also look ahead each month for my new Supplement. I want to thank you for the wonderful job you did in putting out these Supplements. These Supplements are valuable and helpful in our radio field. Oh, boy—the time I have saved with the Mallory Encyclopedia on radio service."
*Sullivan's Electric & Radio Service*
*Duluth, Minnesota*

"I have every subject that you have issued and permit me to say, *ALL* of them are the best that I have seen."
—*Wayne E. Hite*
*Harrisburg, Pennsylvania*

"I have just bought the new third edition of your Encyclopedia, and it sure is a swell book and is worth much more than the price asked for it."
—*A. E. Willett*
*Belmont, Massachusetts*

"Only recently, I purchased the 3rd Edition MYE. I got so much information from that, so that I am thoroughly convinced of the value of the monthly supplements."
—*Maurice J. Spillane*
*Somerville, Massachusetts*

"I may say I have all three editions of your Service Encyclopedia, and I want to keep my 3rd Edition complete. I find your new 3rd Edition *to be the most accurate and complete of anything offered for so little a cost to the serviceman.*"
—*Carl A. Zimmerman*
*Mt. Solon, Virginia*

"I now have all of your manuals except the supplements to #3, and I have found them worth hundreds of times their cost in my service work."
—*Glenn T. Burgess*
*New Martinsville, W. Va.*

"I feel that the purchase of your Third Edition of the MYE and the dollar I sent you for Supplements was one of the finest investments I have ever had the good fortune to make."
—*Fred Appleton*
*Rossland, British Columbia, Can.*

"I have all issues of the MYE and find them very useful. This supplement idea is the best yet—something all servicemen can use and need."
—*H. J. McEvoy*
*Albany, New York*

"I received my copy of the third edition of your MYE and think it is tops. It is far better than the first which I also have."
—*Austin Estep*
*Conicville, Virginia*

"Volume One of the MYE was good and Volume Two was better, but Volume Three is the tops. You are to be congratulated for your effort in gathering all this valuable data together in one book for ready reference. I would not be without it if even it cost twice as much."
—*Everett R. Bolander*
*Richmond, Indiana*

"I have your 3rd Encyclopedia and Supplements to date, for which I wish to express my appreciation. To the best of my knowledge, no other manufacturer of radio products is doing so much to help the radio service profession."
—*Chas. H. Dickens*
*Ironton, Ohio*

"Your new edition of Mallory-Yaxley 3rd Edition, is certainly a fine addition to any serviceman's library. Let's have some more like it at a later date."
—*Edward D. Sager*
*Seattle, Washington*

"So far I have a copy of all 3 editions of your great manuals. They are tops with me. I believe the supplements will surpass the old 2nd edition method."
—*Milo K. Henry*
*Underwood, Minnesota*

"I have recently purchased a copy of your third edition of the MYE and find it extremely useful in everyday as well as specialty work. Congratulations on a swell job of dope-getting-together."
—*Byram C. Guerin, Jr.*
*New York, N. Y.*

# HOW TO GET THEM

Grab your telephone and tell your Mallory distributor to put aside a copy of the 3rd Edition MYE right now. Net price 75c. You may miss out if you don't. Also tell him to enter your subscription immediately for the complete MYE Monthly Technical Service. Price through your distributor $1.00. Or send your check or money order direct to us for $1.50.

**ACT TODAY IF YOU HAVEN'T YET ORDERED YOUR 3RD EDITION MYE *and* SUPPLEMENTAL MONTHLY TECHNICAL SERVICE THE SUPPLY IS LOW!**

***Order from your Distributor NOW***

TUNGSTEN · GLASS — *SOME MATERIALS USED IN RADIO TUBES:* — SILICON · ZINC

# Why Tubes should be tested every six months

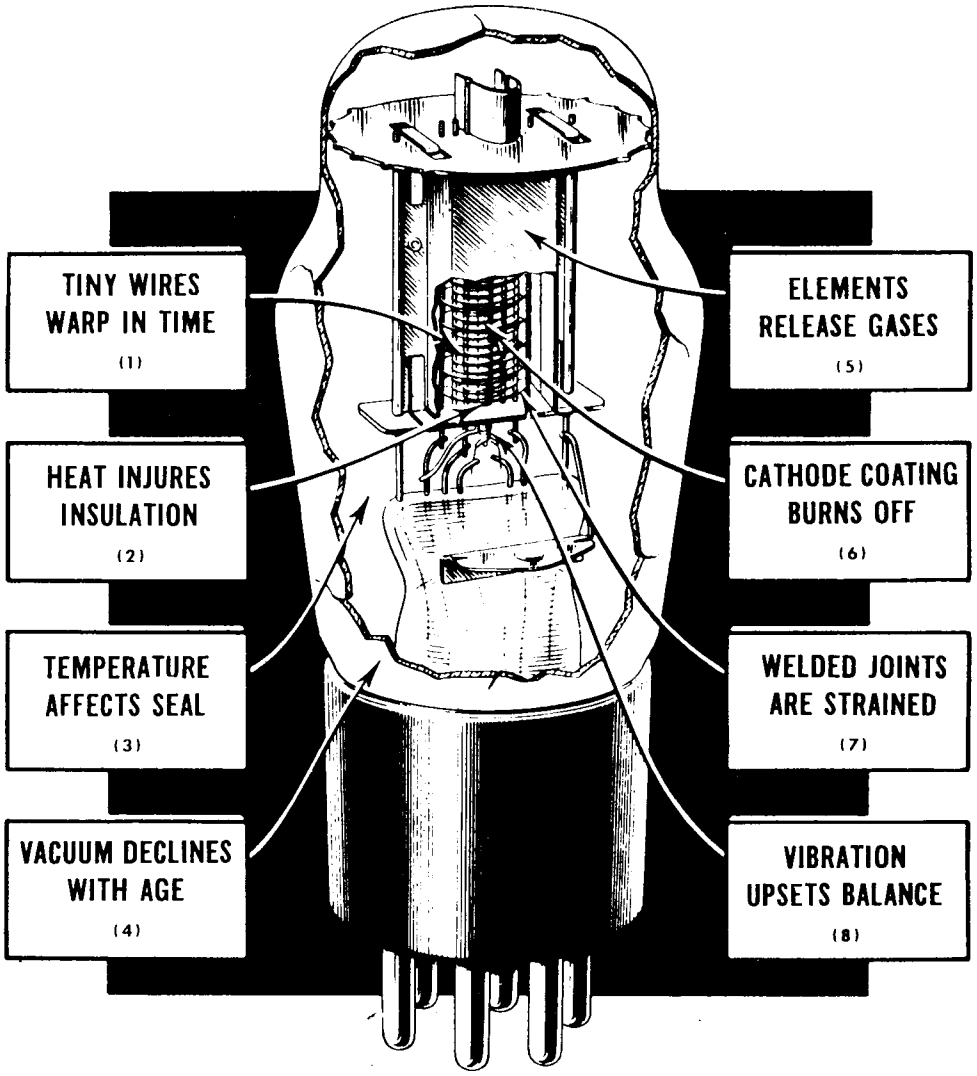


1 Grid wires are sometimes much smaller than a human hair

2 Some insulation operates at incandescent heat

3 Glass and wire must expand equally when heated

4 Inside air pressure is 1/100,000,000th that of outside

RADIO *and Television* RETAILING

5 Power output tubes operate at several hundred degrees

6 Variation in cathode coating less than 0.00007 ounce

7 Constant expansion and contraction with temperature

8 Construction still delicate despite best possible design

## See Your Dealer Twice a Year

· MARBLE DUST · WOOD FIBER · STRONTIUM NITRATE · LEAD OXIDE · ZINC OXIDE · LAVA · MICA · TIN · SODIUM CARBONATE · SODIUM NITRATE ·

· CALCIUM ALUMINUM FLUORIDE · RESIN (SYNTHETIC) · ETHYL ALCOHOL · PORCELAIN · POTASSIUM CARBONATE · BAKELITE

LEAD ACETATE · MALACHITE GREEN · GLYCERINE · ZINC CHLORIDE · IRON SILVER OXIDE ·

## MIDWEST

**MIDWEST 16-34.**

Poor selectivity and weak reception . . . This model does not hold its alignment due to shifting of windings on coils. Coat all coils with wax or liquid cement and realign all trimmers. Go over all trimmers a number of times to uncover interaction between circuits. Before realigning install a 3 or 4 plate variable midget condenser in place of the tone control assembly. Tone control assembly can be mounted on the side of the cabinet. Parallel this variable condenser to C19, which is an adjustable coupling unit between oscillator circuit and mixer grid. This condenser affects tuning of various bands and by having it variable from the outside efficiency will be considerably increased. While aligning set at 450 kc. have the newly installed condenser set at about ¼ mesh and screw C19 to minimum. Unstable operation . . . Ground more thoroughly all shielded cables of this receiver. Double ground the three coil and trimmer frames. Do not depend on rivets. Realign.

**MIDWEST 16-35**

Weak, accompanied by distortion on strong locals. Dimmer pilot light operates in reverse when using sensitivity control on locals . . . too much a.v.c. being applied to second i.f. stage. Diagram shows a.v.c. for this lead connected to high side of diode load resistor on 6 B7. Disconnect this lead and connect to tap on diode load resistor as shown in the diagram by the dotted line. This is the same tap supplying a.v.c. to the first i.f.

## MONARCH

**MONARCH 1000**

Dead . . . by observing the 25Z5 tube it will be noticed that one section does not light. This is due to a shorted filter condenser, usually the one ahead of the filter choke. Replace condenser and tube.

## MONTGOMERY WARD

*MONTGOMERY-WARD 62-11, 12. Lack of sensitivity may be corrected by removing the filter choke and 25 mfd. shunt condenser entirely from the circuit, then removing the second dry-electrolytic filter condenser and replacing this with a 4 mfd., 450 volt type.*

## MOTOROLA

**MOTOROLA TWIN 8.** Excess vibrator hash . . . Screw in bottom of set holding pack in place should first be tightened well. If this fails to remedy noise put a .5 mfd. automotive type condenser on the hot A lead where it fastens on terminal lug and ground to case of set.

**MOTOROLA TWIN-8, DUAL-6.** Buzzing noise from vibrator pack audible through signals, or with volume control off . . . Tighten self tapping screw which holds the vibrator pack in its housing. This is located on the bottom of the set and also holds the cover on.

**MOTOROLA 8-60**

Cuts out after set warms up . . . Check 68,000 ohm ¼ watt resistor in oscillator coil can for change in value. Replace with similar unit inside of can.

**MOTOROLA 8-70**

Set squeals, cuts out . . . replace .01 mfd condenser and 100,000 ohm resistor in grid circuit of 6V7G. These two parts are contained in one unit.

**MOTOROLA 8-70, 8-80**

Loud hum which increases as volume is decreased. Drill out rivets holding pushpull input transformer and rotate transformer to find position of minimum hum. Fasten in place with brackets.

**MOTOROLA 10Y, 12Y**

Cuts out . . . replace 2700 ohm bakelite cased resistor.

**MIDWEST 16, 35**

Distortion when volume control is turned more than ¼ on . . . look for broken lead on .1 condenser connected from plate of first audio tube (76) to tone control.

**MOTOROLA 34**

Noisy . . . tighten i.f. coil shields. These are fastened to the chassis with self tapping screws.

**MOTOROLA '35-'36**

Jumps station on bumpy road . . . loose drive gear. Take out chassis reset drive gear and tighten.

**MOTOROLA 44.** Power supply unit hums but set does not play . . . Take vibrator unit apart. Find 2 small, flat condensers on top of reed unit. The reeds may be identified from the outside by tracing red and green rubber covered wires. Remove original condensers. Solder a .01, 1600 volt d.c. tubular unit externally to each lead, joint the two together and ground the midpoint.

**MOTOROLA 50**

High background at low frequency end . . . shorted antenna series padder. Metallic shavings between segments cut through mica.

**MOTOROLA 50, 60, 80**

Intermittent operation . . . inspect the ground return lead inside the vibrator for loose or broken connection.

**MOTOROLA 55.** Vibrator hash and mechanical rattle . . . Remove powerpack can enclosing vibrator and power transformer, turn over and mount securely on chassis with self-threading screws. Replace vibrator and cover and reverse "A" leads to correspond with car battery polarity. Discard tin cover but place rubber bands around pack before putting chassis back in case.

**MOTOROLA 55.** Elkonode unit is short-lived . . . Connect 50,000 ohm resistor across output of replacement unit.

**MOTOROLA 60**

Volume cutting in and out . . . speaker field wires loose. These joints appear to be welded instead of soldered.

**MOTOROLA 60**

Intermittent fading . . . inspect mica in antenna and r.f. trimmers.

**MOTOROLA 64, 94**

When installing new dial pointer lights, turn base of socket so that pointer light forms sharp line on dial, otherwise light will be wide and ragged.

**MOTOROLA 65**

Distortion after warming up . . . change in value of bleeder resistors. Replace 22,000 ohm plate and screen dropping resistors. Also, 300 and 1,500 ohm resistors in cathode of 75.

**MOTOROLA 65**

Motor noise, especially on Ford V8 . . . Shield hot "A" lead connecting set to fuse block with double layer of copper braid. Ground braid at set end only.

**MOTOROLA 65, 70 GOLDEN VOICE**

Dead . . . Check dual .0008 condenser located near bottom of OZ4 Tubes.

**MOTOROLA 75**

Intermittent . . . .01 coupling condenser (marked 1518) between 75 plate and 41 grid shorting, replace.

**MOTOROLA 75**

Vibrator failure, especially on sets mounted upside down over the steering-column . . . check the rubber covered leads in the vibrator where they are tied with cord at one end of the vibrator frame. Very often these leads break from the constant movement of the vibrator frame. Replace leads with flexible wire.

**MOTOROLA 77**

Vibrator hash . . . Cut a piece of tin to fit top of power pack. Fasten this by the two screws which hold the power transformer in place.

If any hash still persists solder a flexible lead to the top side of the first r.f. section frame of the gang condenser and bond to chassis.

**MOTOROLA 77A.** Loud whistle and distorted reception in early models . . . Generally caused by breaking of solid wire connection between tone control and small fixed condenser mounted on chassis directly behind control. The wire is covered with cotton braid and frequently appears to be ok. Continuity test shows up defect. Replace with flexible wire, such as is used in later models. Dead set . . . Suspect the vibrator first. Remove from housing and check the two .007 condenser shunted across the rectifying vibrator points. They frequently short. Replace with 1600 volt, .007, oil-filled units. Static when car is in motion . . . Sometimes caused by broken soldered joint between antenna coil shield and chassis. Or by corrosion of spring contact grounding the variables. Bond rotors to chassis for permanent repair.

MOTOROLA 78

Poor tone . . . check the voice coil and field to see if these connections have been reversed. This causes the voice coil to become charred. If such is the case replace cone and voice coil.

MOTOROLA 80

Dead, draws high current . . . replace .008 mfd. buffer condenser from plate of 0Z4 to ground.

MOTOROLA 82A, 109KI

Violent oscillation or thumping on high frequency end of s.w. band, around 20 mc. . . . insert 60 ohm non-inductive resistor directly in the grid lead at the grid cap of the mixer tube.

MOTOROLA 89KI

Improper pushbutton tuning . . . adjust relay reversing contacts so that action is positive.

MOTOROLA 89KI (CLOCK TUNING)

Failure to turn on . . . relay spring too stiff. Turns on, but intermittently fails to tune when buttons are pushed, relay contacts dirty or contact springs not stiff enough.

MOTOROLA 124

Tuning motor runs constantly . . . white wire grounded where it goes through dial assembly.

MOTOROLA 345

When installing this set in a 1939 Plymouth using a hinge antenna it often is necessary to shield the lead-in right up to the hinge and bond shield to door trim to completely eliminate motor noise.

MOTOROLA 860, 880

Quivery effect when driving over rough roads. May be accompanied by sharp loss of volume and tone . . . muting switch has insufficient clearance between its contact points. Moving contact vibrates, touching fixed contract. Bend down part of the bracket holding spring of moving contact until gap is great enough without hindering closing action

**MOTOROLA 1935.** Installation in 29, 30 and 31 Chevrolets . . . Bond all metal in overhead frame of car, such as the windshield adjustment and corner braces. Run antenna lead in shield to within 6 inches of antenna. Bond antenna lead to dash and dash to bulkhead. Run bond from firewall up right front post to border on top members. Place grounded screen on floor boards and bond motor and all choke and throttle rods running from motor to driver's compartment. If care is taken no suppressors are needed.

MOTOROLA GOLDEN VOICE 1936

Muffled tone, distortion at low level . . . open volume controls, replace with 500,000 ohm potentiometer.

MOTOROLA 1938 MODELS

Set blurbles when jarred . . . check i.f. transformer and tube shields for good ground to chassis. A good cure is to solder the shields to the chassis.

MOTOROLA DELUXE

Noisy, loss of volume . . . look for shorted leads in shielded cable from r.f. section in tuning head to audio section in speaker housing.

MOTO-MASTER DELUX

No reception . . . Check .008 mfd 2000 volt condensers from one rectifier plate.

OLDSMOBILE 405046, PONTIAC 544268

Mushy tone, fading . . . replace .02 mfd (C21A) condenser coupling triode plate of 6F7 to control grid of 85. Also .04 mfd (C21B) between triode grid and center top of volume control.

ORIOLE 400

No plate or screen voltages . . . open 750 ohm filter choke. Bridge choke with similar 10 watt resistor. No noticeable increase in hum.

PACIFIC 34

Weak on broadcast, O.K. on S.W. . . . open primary of broadcast antenna coupling coil.

## PHILCO

**PHILCO.** When shot friction drive allows dial to slide off new allwave models . . . Make a small dog-ear on each end of track engaged by driver and it won't run off the track again.

**PHILCO.** When "Shadowgraph" tuning indicators fail to indicate check up on the antenna. If it is too short, or so inefficient that it does not pick up strong signals this will happen.

**PHILCO.** Where dial cables show a tendency to slip at several points smear the cable with rosin.

**PHILCO.** *High and low frequency trimmers can be adjusted without an output meter on sets equipped with Shadowgraph tuning indicators by first tuning a station operating on 1,400 kc. and adjusting for narrow shadow and then repeating the process on a low-frequency signal.*

PHILCO T-2

Motorboats while heating then dead . . . check for short between windings of second i.f. transformer by measuring the 75 diode plates to ground. Should be zero with aerial disconnected, negative with signal. If otherwise, remove coil and tape coil leads to prevent shorting.

PHILCO CT2

Sizzling whistle . . . rotor wiper in first r.f. section of tuning condenser not making good contact. Clean and bend spring to insure good contact.

PHILCO 4S

Intermittent . . . check wave trap for open or short.

**PHILCO 5.** Frying or crackling in early serial numbers. If not in eliminator remove grid clip from 6A7 cap and remove lead from clip. Using same size stranded wire with good insulation wind r.f. choke of five turns on clip, reconnect lead. For obstinate cases wind thirty turns number 16 solid, cc wire around pencil. Withdraw pencil and place choke so formed in A lead between low voltage r.f. choke and heater terminal of 84. Keep choke in the vibrator section of base. Solder and tape splices. Late serial numbers have these chokes.

**PHILCO 5.** Oscillations and code signal interference between 500 and 750 kc. in Transitone model . . . Usually due to defective condenser connected between plate of output 41 and ground, located directly beneath socket. Replace with .006.

**PHILCO 5.** No volume, eliminator output only 95 volts. Push down on upper vibrator contact so that spacing is equal between armature and both contacts. Erratic vibrator action. Make sure resistor across contacts is 50 ohms. Buzz, for which vibrator is not responsible. Replace 2A7.

**PHILCO 5, 7.** Scratching noise when tuning . . . Tighten volume control nut in chassis and be sure it is well grounded.

PHILCO FT6

Loud buzz when set is turned on, disappears when cathodes of 75 or 42 are grounded . . . replace double 10 mfd. cathode bypass. This condenser is in the tube compartment of the receiver.

**PHILCO 10.** Audio howl over entire dial . . . Generally caused by loose shield over i.f. tube 39 or 44.

**PHILCO 11.** **Set blows fuses and vibrator is found to be ok . . . Check for short between speaker field housing and on-off switch mounted on volume control. Tape section of field close to volume control and also cover switch assembly with insulating material.**

PHILCO T-11

Boomy tone . . . replace 0.1 m.f.d. tone control condenser with .01 m.f.d.

PHILCO CT11

Noisy, unstable . . . this auto set ha two transformer cans in the center o the chassis held in place by spring: which in time weaken. Insert lugs unde the nuts on top of cans and bond tc chassis with flexible wire. Connectior to chassis can be made at point where gang condenser is grounded.

PHILCO 12X

High pitched whistle . . . shorten twisted speaker leads as much as possible.

PHILCO 14, 91

Volume control noisy, installing a new control only temporary cure . . . Disconnect the end of the control that goes to the detector and from this detector lead connect a 300,000 ohm. ½ watt resistor to ground as shown in the diagram. Also from this lead bridge a .06 mfd condenser to the disconnected end of the volume control. This removes the d.c. from the control and permits quiet operation.

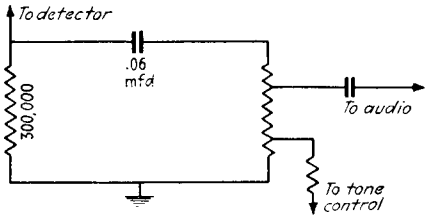


**PHILCO 14 (Early).** **36 autodyne first detector does not oscillate stably at lower frequencies, changing of oscillator coils and bias resistor does not affect permanent cure. Nor does replacement of tube, mica in tuning gang trimmers or cloth covered wiring . . . Substitute 6A7 for 36, employing new circuit diagrammed. The same oscillator coil is used, but the various windings employed differently. Slight retrimming of all condensers associated with circuit is all that is necessary whon revamping has been done.**

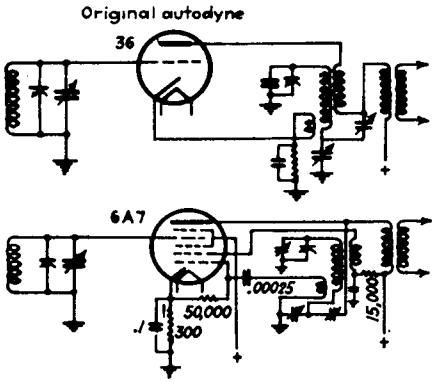


PHILCO 14

No control of tone . . . test 37 first audio in tube tester and by substitution. In many cases this tube is at fault and not the tone control.

**PHILCO 15.** **Cuts on and off . . . Replace resistance-condenser combination No. 24 on schematic. This is the cathode resistance and bypass. Use 200 ohms and .1 mike.**

PHILCO 16

Bad frequency drift . . . defective trimmer on third i.f. transformer. Replace with new transformer.

**PHILCO 16.** **R.f. dead; i.f. ok. . . . Generally caused by ground of wire from first section of condenser gang being pulled too tight against chassis. Dead, no i.f. . . . Checking from grid cap of 77 tube in right hand front corner, audio squeal showing a.f. ok, i.f. transformer first facing front of chassis grounded high voltage lead (black wire). This does not affect audio. Sometimes the compensators in top of i.f. can ground to can. Scale dead from 11 to 26 mc. . . . Replace condenser from lug 1 on bottom of wave switch to ground marked with orange and yellow dots with one of the lug type (value 700 mmfd.). This is due to poor connection internally in pigtail condenser, which stops oscillation. Hum in early series . . . Due to a.c. switch jumper from switch through terminal lug mounted on condenser at back of set. Use shielded wire, grounding the shield.**

PHILCO 16X

Intermittent fading . . . secondary of first r.f. transformer has high resistance connection.

PHILCO 18

Dead . . . check tone control condenser for short.

**PHILCO 18.** **Intermittent fading . . . . Primary of first i.f. transformer opens up. (I.F. 260 kc.)**

PHILCO 18

The tone control condenser shorting is frequently the cause of a dead set.

**PHILCO 18.** **Shadow indicator extremely wide and no signal . . . Voltages are usually all ok in this condition and the trouble is probably shorted trimmers. Bend plates up and insert larger insulating washers.**

PHILCO 18

Dead on low frequency end of dial . . . Check oscillator coil for increase in resistance through corrosion.

PHILCO 18

Oscillation over entire dial for removing grid cap on 78 i.f. set returns to normal . . . connect .005 mfd. 300 volt condenser from center lug of 3615 AA narrow bakelite condenser to ground.

**PHILCO 18.** **Cuts out for short interval and then resumes playing . . . Examine a.v.c. coupling condenser for leaks or broken wire connection in bakelite case, causing it to make or break contact. Tape wooden or rubber handle of screwdriver and tap all bakelite cased condensers while set is in operation, note if volume changes. Where condensers are faulty the pitch is usually melted through the connection hole.**

PHILCO 19

Dead . . . check 15,000 ½ watt resistor on the condensor block. Replace with 1 watt unit.

PHILCO 19

Dead, voltages check O.K. . . . measure the 15,000 ohm ½ watt resistor on the resistor and condenser block. This often changes value. Replace with 1 watt unit.

**PHILCO 19.** **Set dead, voltages ok. . . . Check 15,000-ohm, ½-watt resistor on resistor and condenser block. Apparently it changes value badly when current is applied. Replace with 1-watt unit.**

**PHILCO 19, 89.** **Intermittent operation . . . Try new oscillator tube, or change cathode bias resistor from 15,000 to 10,000 ohms. Examine mica of oscillator high-frequency compensating condenser. If cracked replace as moisture sometimes gets in and stops operation. (I.F. 260 kc.)**

**PHILCO 19, 89.** **Intermittent cutting in and out, no voltage changes noticed . . . Replace condenser number 30 (3903T) and number 27 (3903AB). They can be bridged with a 600 volt, 0.5.**

PHILCO 19, 89

Intermittent or weak on high frequency end of dial . . . examine the mica between the plates of the high frequency oscillator trimmer. If small cracks are visible in mica, replace with new mica.

PHILCO 19-89

Intermittent, returns to normal when line switch is cut on and off . . . resolder oscillator cathode bypass condenser. Poor joint causing intermittent.

PHILCO 20

Intermittent or noisy, okeh when antenna is connected to second r.f. grid . . . high r.f. resistance in plate coil of second r.f. stage.

**PHILCO 20. Bad tone, pitched higher than normal. Replace old cone using solidified disc with new spider type cone.**

PHILCO 20

Oscillation . . . connect .1 mfd condenser across entire voltage divider.

PHILCO 20

Oscillation when volume is increased . . . check .05 mfd screen bypass on 24 r.f. for open.

**PHILCO 20, 70, 90. Tuning shaft wears grooves where bathtub serves as end bearing for rotor . . . The back bearing may be given a new working surface by beating in the end of the tub for about 1/16 inch. The front bearing is not so easily fixed. Take the old dial (a new one is usually needed anyway) and cut out a piece as shown in the accompanying drawing. Drill holes in the**

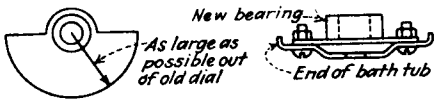


**front end of the bathtub (taking care not to damage the stator) and fasten this piece over the shaft in such a position that the shaft runs true and does not bind when rotated. The machine-screws holding this bearing in place must be secured with lock washers. Of course, the rotor and tubes must be removed during all this violent treatment. Greater precision may be secured if the holes in the piece of dial supporting the new bearing are drilled after the part is in place. This can be done by aligning all the parts in their final position and using one or small C clamps to hold the parts while the drilling is in process.**

PHILCO 29

Fading after short period of operation. . . . Check 350,000 ohm volume control; may vary up to several megohms intermittently.

**PHILCO 29.**

**Audio whistle and bubbling hum . . . Common bias by-pass, a .09, for the two 39's opens.**

PHILCO 30

Low volume . . . . look for high resistance in i.f. coils. Replace defective coils with new units.

PHILCO 30

Intermittent . . . broken flexible wire under cover of grid control leads. Check from condenser to ground shows good contact but a check from inside of rubber control grid caps shows open.

PHILCO 30

**Dead, no screen voltage . . . Common cause is shorting of .25 condenser connected from choke to chassis. This is one section of a dual unit in a metal can near the choke terminals.**

**PHILCO 30. Thin, metallic quality . . . If circuit, tubes and speaker seem to be functioning as well as sets known to be in good condition trouble is probably characteristic "stiffness" of speaker cone. This may be remedied, if the customer will pay for it, by a little careful cone-cutting. Free edge by cutting out between points where screws are necessary for support. Cut slots in the apex member of the voice coil to give it greater flexibility. Spiral slots, starting at the center and winding out near the edge are suggested. Three are usually sufficient.**

PHILCO 37-38

Excessive image interference and low volume . . . replace defective antenna coil.

PHILCO 37-10

Intermittent oscillation . . . check 32,000 ohm resistor under the oscillator coil section for increase in value. Replace with new 32,000 ohm unit.

PHILCO 37-33, 37-38

Remove 1500 ohm resistor across "C" battery in 37-33 model and 900 ohm resistor in the 37-38. Replace with 6000 ohm value. Low value shortens battery life.

PHILCO 37-604

Distortion and birdies . . . open .1 mfd bypass across 300 ohm cathode resistor on 6K7G.

**PHILCO 37-610**

**No short wave reception . . . small mica condenser (part No. 20) soldered to tuning condenser worked loose. Resolder and bend to clear plates of variable condenser.**

PHILCO 37-650

Dead . . . replace C 51 and C 48 twin .003 1000 volt condenser connected from plate of 6F6G's to chassis. Also replace C 25 a .1 mfd. connected from B plus to chassis.

PHILCO 37-660

Intermittent distortion after set heats up . . . second section of candohm resistor (15 ohms) has increased to 30 ohms. Replace with 15 ohms wirewound unit.

**PHILCO 38**

**Oscillator dead . . . Remove oscillator coil and heat thoroughly to drive out moisture. Dip in a 50/50 preparation of beeswax and paraffin, when cool replace.**

PHILCO 38

Distortion after replacing leaky coupling condenser on first audio . . . check battery pack for positive charge at minus 7½ "C" terminal. This is probably caused by discharge and small recharge from "B" plus through leaky condenser.

PHILCO 38

Intermittent, dead . . . in this model the i.f. transformers are wound on wood dowels. Small staples are used to fasten the leads to the dowel.

In some cases it has been found that the staples were driven so far into the dowel that the insulation on the wire was cut. At the same time the ends of two staples met inside the dowel, shorting the coil. The most effective method for finding this trouble is to use a low-range ohmmeter.

PHILCO 38-2

And other models using phase inverter—poor tone—both output tubes must check O.K. Unbalanced output tubes will cause distortion in this model.

PHILCO 38-5

Noisy, intermittent or dead . . . check screen dropping resistor No. 21 in diagram. This is a 10,000 ohm 1 watt unit. Replace with wirewound type.

PHILCO 38-8

Oscillation at high volume . . . shunt .0005 mfd condenser from grid of 6K5G to ground.

PHILCO 38-12

Intermittent . . . look for shorted oscillator trimmer located on top of gang condenser.

PHILCO 38B

Noisy volume control . . . bias voltage flows through control causing noise. Change circuit as shown below.

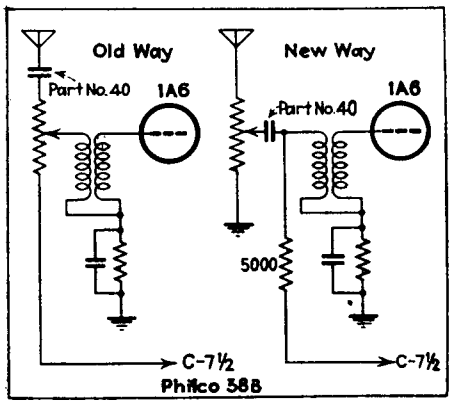


PHILCO 39-11

Insensitive on B.C. band, calibration off . . . check band switch stop to see if this allows full movement of switch arm.

PHILCO 39-30T

Crackling, noisy . . . check 250 mmf. mica condenser bypassing plate of the 75 tube.

**PHILCO 39-30T**

Oscillation as volume control is advanced . . . replace .00025 mfd plate bypass on 75 first audio with .01 mfd.

**PHILCO 39-31**

Extremely high pitched tone with tone control set at "high" . . . reverse line plug. If condition still persists, change position of wires around volume control leads and grid lead to 75.

**PHILCO 39-35**

If pushbuttons will not stay in remove chassis and take out the two small blocks at the front inside. This permits the chassis to go ¼ inch further forward.

**PHILCO 39-36**

Set plays but builds up to a bad hum at times. . . . Check primary of power transformer for leak to ground.

**PHILCO 39-40XX**

Works on push button, dead on manual tuning . . . check oscillator tuning gang for short in trimmer.

**PHILCO 39-116**

Weak on automatic tuning (mystery control) . . . clean contacts on rotary arm of the stepper relay with carbon tet.

**PHILCO 41DC. Pronounced nasal quality and choppy reception. Replace 500,000-ohm first audio stage grid coupling resistor with 100,000-ohms and insert a 3,000 current-limiting resistor in series with the primary winding of the push-pull input transformer.**

**PHILCO 45**

Weak . . . check cathode resistor of 6A7 for increase in resistance. Replace with ½-watt 500 ohm unit.

**PHILCO 45. No plate voltage on 75 tube . . . Bad .1 mfd. plate condenser, part No. 30-4170. When replacing use a higher voltage unit. Intermittent reception, especially when tuning . . . Bolts that hold tuning condenser to the chassis may be too long or too tight, shorting to the stator section. This is a hard one to find if you don't know about it. Loosen bolts or cut off ends to correct.**

**PHILCO 45.** Continual failure of type 80 . . . Replace filter No. 30-2028 with new part No. 30-2079.

**PHILCO 45**

Low volume during warmup, then increases . . . replace wave trap.

**PHILCO 45L**

Noisy with weak or no reception all plate voltages normal . . . check first i.f. transformer for open.

**PHILCO 45, 145. Distortion or no signals, trouble not due to tubes . . . Replace bypass number 30-417OM with .05. 600 volt.**

**PHILCO 46 D.C. Replacing type 14 and 17 tubes with others more easily obtainable . . . Include 75 ohm, 10 watt resistor in series with speaker field and use 39's in the r.f. stages, 36 in the detector, 37 in the audio.**

**PHILCO 47**

Intermittent reception, frequent burnout of tubes and pilots . . . check pilot light socket behind the tuning meter for short to chassis.

**PHILCO 47**

Intermittent reception, frequent burnout of tubes and pilot lights . . . short between chassis and pilot light bracket behind shadow tuning meter.

**PHILCO 50, 50A. Set becomes noisy and goes into oscillation at low frequency end of band . . . Ground the speaker.**

**PHILCO 54**

If vernier dial slips when tuning, oil the bearings of the gang condenser before tinkering with the dial mechanism.

**PHILCO 54. Hum . . . Eliminate grounds to chassis, generally at network of a.v.c. resistors or grid lead of 75 tube.**

**PHILCO 54**

Weak . . . replace open 12 mfd. electrolytic filter condenser. Dead . . . check C 31 a .00011 mfd. unit from plate to cathode of 75.

**PHILCO 54**

Distortion and rapid motorboating when strong signal is tuned in . . . replace 12 mfd filter condenser. This condenser will usually test okeh but wil open with a signal.

**PHILCO 54**

**Fading, motorboating, dead on part of dial . . . replace coupling condenser, 51000 and 5000 ohm resistor of oscillator circuit.**

**PHILCO 54**

**Unstable volume . . . replace dual condenser No. 54 located behind 43 tube. Heat from tube damages this condenser.**

**PHILCO 54**

Intermittent . . . check oscillator coil terminals for loose connections.

**PHILCO MODEL 54**

Poor tone and sensitivity—bad electrolytic, part No. 15. A whistle in this model can be stopped by rearranging the i.f. plate and grid leads.

**PHILCO 54, 80, 81, 84. Weak . . . . First look for poor 77, then for open i.f. pickup coil. The one that is bank-wound is most deceptive as the set balances without it. (I.F. 460 kc.)**

**PHILCO 57**

Dial drive slips . . . release end bearing on gang condenser. If dial still slips, remove drive mechanism, take apart, and insert thin shim under tip of drive shaft. Reassemble and oil thoroughly.

**PHILCO 57**

Noisy tuning . . . look for wax between variable condenser plates. This is caused by the power transformer mounted directly above condenser.

**PHILCO MODEL 57**

No signal—bad resistor No. 21 . . . Unless the voltages on the 77 detector tube are correct this set will not work.

**PHILCO 57C. Intermittent or no reception . . . See if white lead on coil is shorted to chassis. It passes over metal bracket holding coil in place. Re-run it under the coil bracket if frayed.**

**PHILCO 59**

Oscillation after normal warm-up period . . . connect .1 mfd bypass from green terminal of filter block to chassis.

**PHILCO 59**

Erratic, intermittent, squeals . . . replace .09 mfd screen bypasses. If this does not eliminate trouble check .015 mfd bypass from high voltage centertap winding of transformer to ground.

**PHILCO 59**

**Can't tune in stations; cuts out when jarred . . . tighten oscillator and i.f. shield cans nuts. Make sure there is a lock washer under each nut.**

**PHILCO 59.** Fading . . . Replace second detector 77. Also check i.f. transformers.

**PHILCO 59C, 595.**

**Low volume, no reception on low frequencies . . . Take out antenna and oscillator coils and resolder all connections, tighten all screws on tuning condensers. Replace 6,000 ohm resistor and 1,400 mmfd condenser. Align.**

**PHILCO 60**

Dead, full voltage at rectifier, only 50 volts at set side of speaker . . . look for poor insulation on primary white lead of second i.f. where it crosses bracket.

**PHILCO 60**

**Motorboating . . . cut green lead from bypass can to trimmer condenser. Connect 0.1 mfd. 600 volt condenser from trimmer to ground.**

**PHILCO 60**

Intermittent hum . . . suspect paper .25 mfd condenser from the last filter to ground, housed in metal condenser pack.

**PHILCO 60**

**Intermittent or low volume . . . Check for high resistance open in secondary of antenna coil.**

**PHILCO 60. Intermittent loud buzzing similar to outside motor interference but originating in set . . . Replace 6A7 oscillator-first detector even though it tests ok.**

**PHILCO 60, 505**

Noisy . . . check .18 mfd cathode bypass on 6A7 tube.

**PHILCO 65**

Fading . . . **intermittent open in speaker field. This field should have a resistance of approximately 3000 ohms.**

PHILCO 70

When replacing the filter condensers be sure to insulate the can from ground, otherwise the 47 tubes will be without bias.

**PHILCO 70**

**Hum on stations near the center of the band . . . Look for trouble in the condensers seriesed across the power transformer primary.**

PHILCO 70

Dead except on strong stations. . . . Check coupling condenser between second detector and 47 grid for open.

PHILCO 70

Distortion, fades out completely . . . replace .25 mg resistor in grid circuit of 47.

PHILCO 70

Loud howl . . . on receivers with a serial number below 22,000 suspect an open circuited detector plate bypass on B plus side of r.f. choke.

PHILCO 70

Oscillation that cannot be cured by the usual methods . . . bypass the filaments of the r.f. and i.f. tubes with capacities ranging between .005 and .25 mfd. The correct value must be found by experiment.

PHILCO 70

Howling . . . caused by vibration of condenser plates due to dried rubber mountings under condenser. If the rubbers cannot be removed easily a simple remedy is to float the chassis from the cabinet by placing rubber grommets under the chassis.

**PHILCO 70. Howl or microphonics when tone control is in left counterclockwise position . . . Inspect .00025 mfd. phone condenser connected to plate of second detector. It has a yellow dot on one side and frequently opens or changes value.**

**PHILCO 70. Set impossible to balance so that stations come in on proper dial settings . . . When all else fails remove gang condenser. It will usually be found that the front end of the shaft has dropped a fraction of an inch although this is not visible from the top. Replace with new gang unit.**

PHILCO 70, 70A

Dead, with rectifier plates red hot . . . if filter condensers check okeh, inspect filament leads of tubes at rear of chassis at points where leads pass under primary trimmer condensers of I.F. transformers. Leads sometimes come in contact with edges of condenser plates, the latter in time cuts through the insulation on the wire shortening of entire "B" supply.

**PHILCO 70, 70A. Replacing dual volume control with single, tapered unit, giving even smoother control. Circuit is self-explanatory. The 200 ohm fixed resistors are 1 watt types.**

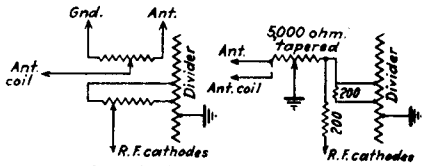


Old Twin Control New Single Control

**PHILCO 70, 70A, 370. Impossible to align circuit at 1400 kc. . . . Look for open .00011 condenser between oscillator coil and plate of oscillator. Replace with .0005 and the set will align and be more selective than originally. Where this trouble exists reception will be ok below 850 kc. but will fall off rapidly at higher frequencies.**

**PHILCO 70, 90. Feedback not traceable to missing rubber cushions or floating condenser gang . . . Drop wad of paper into oscillator coil form, mounted on the chassis by means of a bracket, and, with set upside down, drop catacomb wax onto paper off soldering iron point. Feedback is due to vibration of oscillator coil itself.**

**PHILCO 70, 90. Slipping dial drive shaft . . . Pull shaft down tight. Solder thin washer to bracket.**

*PHILCO 70, 90. If airport beacons operating on 260 kc. cause interference, readjust the i.f. compensating condensers and the oscillator compensating condenser to either 250 or 270 kc.*

**Philco 70, 71, 90, 91. Fading of locals is usually due to failure of a 1 mfd. condenser. Use sharply pointed test probes to locate the defective unit, gently lifting up the wires that come out of the hard-rubber case which houses the condensers.**

PHILCO 71

Distortion . . . replace 70,000 ohm plate resistor on first audio with 50,000 ohms.

PHILCO 71

Broken dial cable . . . On this set a woven dial cable is used. On the dial where the cable fastens there will usually be found a sharp edge. If a cable is too tight this edge cuts the strands. To remedy: place a small section of Scotch Tape over the edge. This tape is flexible, transparent and may be obtained at almost any stationery store.

PHILCO 71

Cuts out on strong locals, low powered stations come through weakly . . . change resistor in oscillator circuit from 15,000 to 10,000 ohms.

PHILCO MODEL 71

Sometimes in order to make the oscillator tube in these sets work over the entire band the cathode resistor was lowered, if this is too low the set will lack volume on the 600 KC end of the dial. The correct value of this resistor for best operation should be about 10,000 ohms.

PHILCO 71

Cuts out on strong locals, low-powered stations can be heard in the background . . . change the bias resistor on the oscillator from 15000 to 10000 ohms.

**PHILCO 71.**

**Intermittent operation, volume dropping 50 per cent, proper operation restored the instant an analyzer plug is inserted for test . . . Check voltage divider section between screen grid and cathode of second detector.**

PHILCO 76

Intermittent volume, opening and closing line switch restores operation . . . replace R19 and R20 plate dropping resistors with new 100,000 ohm units.

PHILCO 76

Fading . . . check ground strap from ground post to chassis for poor contact. Solder lead from post to chassis.

**PHILCO 76. Hum starts about 15 minutes after set is turned on, then all reception stops . . . Look at r.f. coils. Wire comes loose on form and drops on soldering lugs at bottom coils, shorting primary to secondary. Loosen wire with thinner and push back in place then cement.**

**PHILCO 76, 77**

Hiss on all stations . . . May be reduced by raising the value of the detector cathode resistor.

**PHILCO 80.**

**To improve volume and quality, especially in models with a star stamped on chassis . . . Change 1 meg. grid resistor to 0.5.**

PHILCO 80

Weak . . . Check mixer cathode resistor for change in resistance.

PHILCO 80

Insensitive . . . replace 240,000 ohm plate resistor. This unit has greatly increased value.

**PHILCO 80.** Volume control does not cut down smoothly on strong locals and on some stations will not attenuate to zero . . . Change volume control circuit, using No. 3793B part. Original control had one terminal to ground, the other to the antenna post and the variable arm to the antenna coil. Using new part place one end to the antenna post and also to the antenna coil, the other to the i.f. grid return and the variable arm to ground. The i.f. grid return end goes to the 2nd detector, anchored on cased condenser lug to one side of chassis. Remove lead from condenser.

PHILCO 80

Loose rotor on condenser gang . . . Remove assembly and take off rear bearing plate. Center punch the depression on this plate so that it protrudes further against shaft. If plates are out of line when the unit is assembled they can be realigned by loosening set screws holding them to shaft.

**PHILCO 80 AC.** Noise . . . Plate lead from i.f. transformer to first 36 rubs coil base and insulation is punctured. Or, grid resistor number 26 for 42 tube, lying close to socket, shorts to prong.

PHILCO 81

Fading . . . Usually caused by failure of one of the condensers in the a.c. line or in the center-tap of the power transformer. Opens are the most common failure. Usually attended by a hum or squeal, depending upon which condenser opens.

**PHILCO JR 81.** Oscillation of intermittent nature . . . Replace condenser 3793R, which acts as bypass for 42 output tube and also bypasses one side of the a.c. line.

PHILCO 84

Sudden drop in volume . . . dual condenser bypassing screens of 77 tubes shorting: replace.

PHILCO 84B

Intermittent reception . . . check .0014 mfd condenser connected to oscillator coil. This is part No. 7. Tone and volume can be improved by connecting an 8 mfd condenser from the green terminal of electrolytic filter to ground.

PHILCO 84

Oscillation . . . connect .05 mfd. from high voltage to ground.

PHILCO 84

Loud hum . . . check rivet that holds 42 socket, lug from 42 cathode grounding on rivet.

PHILCO 84

Impossible to turn volume off on locals . . . shield first detector tube. If still troublesome shield grid lead.

**PHILCO 86.** Low hissing which persists even with known-to-be-good tubes . . . Often caused by defective first audio transformer. Don't rely on tests. Substitute new unit.

PHILCO 86

Dead . . . Check for a shorted .1 mfd condenser sealed in cylindrical can along with the plate resistor. Disconnect the condenser lead and substitute a 600 volt unit.

PHILCO 87

Crackling, noisy . . . replace 3785 ohm section of R8 with 20 watt 3000 ohm and 750 ohm units in series.

PHILCO 87

Hum control ineffective . . . shorted twin .25 mfd. condensers across 1½ volt filament. Replace condensers, set hum control. Condensers are in long can on front of chassis.

**PHILCO 87.** Instability, will not neutralize . . . The first, second and third r.f. plate circuits include resistors wound directly on .1 mfd. condensers. The .1 mike units are connected between the resistors and the r.f. primaries. Usually the first one is open, causing excessive oscillation. Check all three.

**PHILCO 87.** Low volume or fading . . . Look at r.f. trimmers. Metal eyelets in insulators supporting these may have temporary short to trimmer stators. Remove screws through eyelets and slip thin piece of insulation under them. Remove adjusting nuts and give trimmer stators an upward bend. This tension will hold them in place.

PHILCO 89

Continuous crackling . . . look at second i.f. primary for partial open.

**PHILCO 89.** Voltages check ok but set refuses to operate over entire dial . . . Try reversing primary leads of the first i.f. transformer.

PHILCO 89B

Poor tone, intermittant reception . . . section of part No 7 in 75 detector plate leaky or bad.

PHILCO 89B

Low volume and noisy . . . defective second I.F. transformer. This unit will check o.k. on voltage test.

PHILCO 90

Noisy. . . . Check for loose oscillator coil shield. Crimp edge to make tight fit or solder to chassis.

PHILCO 90

Dead on high frequency end of dial . . . connect 10,000 ohm resistor across oscillator cathode resistor.

**PHILCO 90.** Fading, periodic program interruption. Replace all three 3903 (L.M.R) condensers extending one behind the other from tone control to speaker plug for permanent repair.

PHILCO 90

(With one 47 output) Weak, stations do not track with dial settings . . . althought the i.f. peak is given as 260 kc. by the manufacturer some were built to align at 175 kc.

**PHILCO 90.**

Microphonic howl, stops if oscillator or i.f. coil cans are pressed or squeezed . . . Remove coil assemblies and melt paraffin over the forms to hold leads solidly in place. Paper around the coils frequently becomes loose, vibrates and moves leads sufficiently to cause trouble.

**PHILCO 90.** Intermittent reception . . . Generally due to trouble in coupling condensers between first and second 27's or between second and third 27's, or between third 27 and 47 final amplifier. The first one is hard to test and it is best to insert a new one and try the receiver.

**PHILCO 90.** Oscillation between 1,100 and 1,500 kc. when trimmers are adjusted to resonance. Shunt a 0.1 mfd., 200-volt condenser across first r.f. (24) and oscillator (27) 5,000-ohm cathode resistors.

**PHILCO 90.** Audio howl not due to microphonic tubes . . . Check for control shafts or chassis touching front of cabinet, and also for correct functioning of rubber cushions. Vibration frequently causes oscillator plates to vibrate, causing tuning change and howl.

PHILCO 90, 90A

No reception, set smokes . . . filter choke coil shorts to core due to absence of paper insulation between two components. As short usually damages coil badly, install new choke having needed insulation.

PHILCO 90, 90A

No reception. . . . 27 oscillator periodically goes dead despite normal circuit conditions.

**PHILCO 91.** Gradual widening out of the shadow tuning indicator after ten or fifteen minutes of operation . . . Replace two 44 a.f. and i.f. tubes They may test ok but due to gas gradually draw higher and higher plate current, eventually burning out the indicator through which this current flows.

**PHILCO 91X.** Hum, developing after few hours of use, accompanied by distortion . . . Replace input push-pull audio transformer. Secondaries are sometimes faulty.

**PHILCO 95.** Intermittent reception volume increases to high level and drops back to normal when test instruments shock circuit . . . Look for intermittent trouble in bypass condenser on low side of volume control. The lead to this condenser goes from control, through a cable, and connects to filter block. Cut off wire at both ends where it emerges from cable and resolder a .5 tubular between low end of volume control and grounded lug of nearest trimmer.

**PHILCO 95, 96, 112**

Blocking, similar to very slow recovery of avc, set otherwise normal . . . replace volume control. Ringing sound in speaker when set is removed from cabinet . . . Same cause, volume control. Static similar to that caused by bad a. f. transformer . . . Check same control

**PHILCO 96**

Intermittent operation for short periods, any attempt to make tests restores operation . . . replace 30,000 ohm metalized resistor in plate of first audio.

**PHILCO 96.** Serious oscillation not traceable to open condenser or resistor . . . Replace screen feeder resistor with 50,000 ohm, 1 watt replacement and bypass with 2 mfd. Bypass the a.c. line with .001. Add a .1 mike to center of grid resistor network in the audio channel.

**PHILCO 96**

Poor sensitivity after bypass condensers, tubes have been checked, especially at 550 end of dial. . . . Suspect antenna coil which is composed of approximately 250 turns of resistance wire at approximately 10 ohms per foot. Rewind with 100 turns of No. 26 or No. 28 copper wire.

**PHILCO 111, 112.** Poor sensitivity and tone . . . Replace resistor number 8 with 75,000 ohms. This peps up both models.

**PHILCO 111, 111A, 211, 211A**

Low volume, all voltages check . . . Change ½ meg. resistor (#44) in plate circuit of '27 detector.

**PHILCO 111, 111A, 211, 211A**

Cutting off of signal followed by oscillation . . . intermittent opening of .05 mfd. condenser between cathode and low end of first detector grid coil.

**PHILCO 111, 111A, 112, 112A, 211, 211A**

Weak, distorted, noisy . . . suspect audio transformers for open in these receivers.

**PHILCO 112**

Distortion on local stations . . . replace the a.v.c. resistor to the first r.f. tube with a 70,000 ohm unit.

**PHILCO 112**

Poor tone . . . check 5 watt carbon resistor between speaker return and ground for drift from original value of 15 M. If necessary to replace use wire-wound unit.

**PHILCO 112X.** Slight, continuous whistle . . . Move plate wires away from compensating condenser.

**PHILCO 112, 112A, 212, 212A**

Oscillation and distortion when sensitivity switch snapped to maximum . . . open .5 mfd. condenser located in filter block bypassing screens of first detector and i.f.

Weak or dead . . . check 15,000 ohm resistor between minus of speaker field and chassis for decrease in value. Replace with 5 watt unit.

**PHILCO 116**

Intermittent oscillation over entire dial . . . replace 10,000 ohm resistor in voltage divider section. To test, turn volume up full, tune off station and tap resistor, listen for crackle. This resistor is diagram #96 part #3524.

**PHILCO 116B**

Oscillation . . . push hot grid lead on volume control close to chassis.

**PHILCO 116RX, 55RX**

Hum when tuned to strong stations . . . Circuit ground returns riveted to chassis. Solder all these points.

**PHILCO 118**

R.F. hash repeats at twice i.f. frequency over entire dial . . . one side of dual filter (30-2045) open.

**PHILCO 144**

Shadowmeter varies in accordance with loud signals . . . Replace triple section electrolytic condenser.

**PHILCO 200, 201**

While replacing a defective fidelity control in this set a peculiar case of trouble was experienced. The control is a three-section wire-wound variable resistor, having one section of 1500 ohms and two sections of 8775 ohms each. The sections are insulated from each other and arranged so to be controlled by a common shaft. This is shown in the drawing.

In the original control, the part number is 33-5083. The replacement chart specifies part number 33-5103 as the correct replacement. (33-5083 evidently being discontinued.)

Upon installing the new control trouble was encountered. Instead of

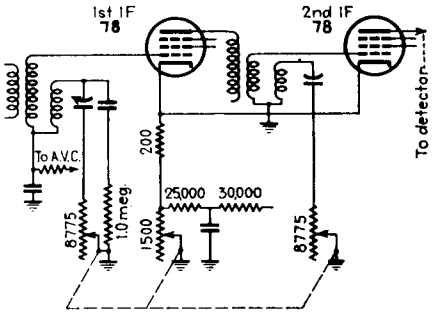


operating like a fidelity control, the replacement part acted like a volume control.

The explanation is this: the fidelity control circuit for this set is shown in Fig. 1. Notice that the 1500 ohm section of the control is in the cathode circuit of the first and second i.f. tubes, in series with the 200 ohm resistor which provides the fixed bias. The two 8775 ohm sections are connected to the tertiary windings of the first and second i.f. stages respectively. On the original control (33-5083) the arrangement of the sections is as shown in Figure 2. In the replacement control (33-5103) the sections are arranged as shown in Figure 3. Comparison of the two figures will show that the 1500 ohm section is located differently in the replacement control, than it is in the original. It is this difference of construction which causes the unwanted volume control action, because if customary repair procedure is followed in replacing each wire in its original position, instead of having a 1500 resistance in the cathode circuit, we will have 8775 ohms. As the control shaft is rotated the bias on the 78 i.f. tubes will gradually be increased to a value which will make the tubes inoperative.

In order to obtain the correct replacement for 33-5083 it is merely necessary to transpose the wiring on sections 1 and 2. The control will then operate properly. Put the single wire, lug A section 1, on lug A, section 2. Put the two leads from lug A section 2, on lug A section 1. Lug B is blank on both controls.

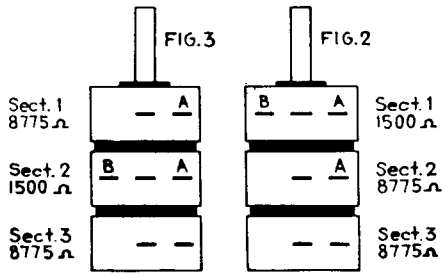


**PHILCO 212**

Fading. . . . Replace bypass connected to low side of volume control. This is a tone compensator condenser for increasing bass response at low volume.

# RADIO RETAILING'S "Service Shortcuts"

**PHILCO 221, 221A, 21, 21A**

Dead; sometimes distorted, tunes sharply . . . replace Cathode bias resistor of 24A detector with 200 ohm 2 watt carbon.

**PHILCO 511. Excessive hum. Where parts check ok hum can be removed by shielding the detector, grounding the shield.**

**PHILCO 511. "Quivery" reception . . . Check for partial open in voltage divider section feeding the r.f. plate.**

**PHILCO 600**

Fading . . . leaky twin .09 mfd. Bakelite housed condenser bypassing screen of 6A7 mixer and 77 detector. Replace with two .1 mfd. 400 volt units.

**PHILCO 610**

Distortion and low voltage on 75 plate. Check .1 mfd condenser No. 47 at intersection of two 100,000 ohm resistors in second det. plate circuit. Re-align all circuits.

**PHILCO 610**

Oscillator whenever volume control is touched . . . check 41 output plate condenser for open. This condenser is connected in series with tone control condenser, is located in tone control housing.

**PHILCO 610**

Chirping oscillation, decreases in intensity when tone control is on full . . . replace volume control.

**PHILCO 610**

Mushy . . . Voltage on 42 screen much higher than plate. Insert 2000 or 3000 ohm resistor in series with screen lead.

**PHILCO 620**

No reception . . . test condenser bypassing plate supply of 75 second detector for short. Unit is housed in bakelite container, one lead being connected to juncture of 70,000 and 99,000 ohms resistors, other lead to chassis through screw holding unit to chassis. Though capacity value varies in different runs, 0.1 mfd. replacement is okeh in most cases.

**PHILCO 620**

Noisy . . . ground 6A7 control grid temporarily. If noise stops suspect primary of 78 r.f. coil.

**PHILCO 623**

Low volume . . . replace '30 second detector even though original tube tests O.K. Grounding the grid of the '34 through a 1 meg. resistor will also increase volume.

**PHILCO 630**

High pitched whistle with the volume control about ¾ on, disappears when control is turned in either direction. . . . Look for open condenser (part #30–4042 connected from plate of 42 to B minus.

**PHILCO 635**

When replacing tubes in this set be sure the grid cap lead of the 75 tube is inside the tube shield otherwise "birdies" will be present at one setting of the volume control.

**PHILCO 643, 643A**

Weak, all voltage and capacities check okeh . . . replace output transformer.

**PHILCO 650**

Reluctant oscillator, oscillator won't start when set is first turned on . . . leaky condenser part No. 71A in screen circuit of 6A7.

**PHILCO 650**

Erratic volume control operation . . . Put a .00005 condenser between the tap of the control and ground.

**PHILCO 700**

The large tubular condenser under the chassis (part number 304146) frequently breaks the leads under its own weight. Always check this and support more rigidly.

**PHILCO 806. Rattles . . . Bond all ground terminals riveted to sockets to chassis.**

**PHILCO 806, 807, 808, 809, 816, 817, 818, 819**

Vibrator hash . . . insert an iron core "A" choke in series with the speaker field. Choke must be of low resistance and a few henries inductance.

**PHILCO 817-827**

Intermittent hum, loss of volume . . . replace 4 section bypass block housed in can.

**PHILCO F-1640**

Distorted reception . . . check speaker cone for alignment. May also be a bad or open volume control which opens up the 75 grid circuit. In case the speaker is out of alignment, take the cone out and realign using shims. In most instances, this happens to sets still within the warranty period and replacements can be obtained from the manufacturers.

**PHILCO 1936 FORDS**

Intermittent fading. . . . Look for poorly soldered connection on one of the lugs of oscillator coil.

**PHILCO AUTO RADIO**

Noisy, motor noise, motorboating . . . check the antenna connector for poor contact. Often this coupler becomes corroded, or the spring loses tension. Stretching the spring is only a temporary repair. For a permanent job insert an additional spring under the original one. A fibre washer between the two will help to keep them in place.

**PHILCO AUTO RADIOS**

**Burned fuse and power transformer . . . vibrator sticking caused direct short on power transformer. Bend right angle lip on vibrator reed enough to clear magnet.**

**PHILCO CONE-CENTRIC TUNING MODELS**

Noise when dial is turned . . . clean and polish spring, also clean and polish facing on which this spring rides. Spring located under dial.

**PHILCO CUSTOM AUTO RADIOS.**

**Burning of wires to control head . . . Two wires coming from the tuning head are held in position by a thin clamp. This is not necessary and in some cases where the U clamp is drawn tight it punctures the insulation.**

**PHILCO DODGE**

Insensitive on rod antennas . . . remove shield can on side of set to which antenna is connected and short small choke found in series with antenna lead. Realign first r.f. stage.

**PHILCO MAGNETIC TUNING MODELS**

Magnetic tuning or AFC will not balance correctly on both sides of channel—replace type 6N7 oscillator control tube.

**PHILCO MIDGETS**

**Vernier inoperative due to wear in ballrace . . . remove collar, pull out shaft being careful not to lose ball bearings, place small end of shaft on flat of vice and give several good taps with large hammer after having made sure condenser proper runs free in its own bearings.**

**PHILCOPHONE 901**

Bad hum . . . insulating washers, on pilot light allowing light socket to short to ground.

**PHILCO PHONO-COMB. Hum not traceable to poor tubes or defective parts. Ground frame of motor to set chassis.**

**PHILCO TRANSITONE 5. Oscillation "birdies" in older models . . . Generally curable by pulling 15,000 ohm resistor in 2A7 circuit up toward front of set. Tendency to "swish" . . . Change 78.**

**PHILCO TRANSITONE.** When installing set in 1934 Chevrolet do not mount on right side near coil if this is avoidable as it is practically impossible to remove motor noise due to chassis pickup. The battery lead on the model 10, cut to fasten to the ammeter or starter, is the guilty wire. Shielding don't help. Lengthen the lead, shield it and then run it directly to the battery, connecting the lead to the negative and the shield to the positive post.

PHILCO TRANSITONE 5, 10

No voltage, vibrator tubes and filter check o.k. . . . replace .01 mfd. condenser connected between plates of 84 tube.

FORD PHILCO 1935, 1936

Intermittent . . . check .01 mfd condenser connected to volume control for loose connection.

**PHILCO 1936 TRANSITONE.**

Intermittent reception . . . Loose antenna plug insulator should be filed to almost the level of the plug as it is too long, preventing good contact.

PHILCO 1937 MODELS

Distorted, fuzzy . . . Check the voice coil gap for steel filings. This is quite a frequent trouble. Filings get behind the heavy cardboard spacer and gradually work into the voice coil.

## PIERCE-AIRO

**PIERCE-AIRO 724.** Weak reception with oscillation. Before making any adjustments look for open cathode by-pass condenser in first and second radio stages. These are single unit. Turn chassis upside down, look on radio-frequency coil partitions. Unit is one located nearest rear of chassis. Use 0.5 mfd. replacements.

## PILOT

**PILOT 93.** When this a.c.-d.c. superhet seems to be out of alignment, whistles all over dial . . . Before attempting to realign check by-pass condensers 3x.1 in one can just below 170-ohm filament resistor. Heat from resistor frequently causes the block to leak or open and also causes fading. Replace with separate tubular condensers.

PILOT 293

Insensitive . . . poor contact in band switch. Clean all contacts with carbon tetrachloride.

**PILOT DRAGON 10.**

A.c. hum level abnormally high . . . Look for ground at the reflector mounted behind the pilot light. Sharp corner of this reflector frequently pierces the small piece of fibre insulation included to prevent shorting of filaments to ground.

PILOT DRAGON 10

Hum . . . look for ground at the reflector mounted behind the pilot light. Replace fiber insulation at this point.

RAC 6K2

Inoperative on broadcast band only . . . investigation showed evidence of mice. Layer of moisture between broadcast band, mica trimmer shorting plates. Remove trimmer, clean thoroughly and insert new mica separaters.

RAC D-11-2

Oscillation on high frequency end of short wave band . . . Check oscillator grid resistor. This resistance is mounted on top of the tuning condenser.

## RCA-VICTOR

**RCA.** Noisy or erratic reception in recent models using a 745 mmfd. fixed condenser as oscillator coil padder . . . Replace with condenser of same value removed from oscillator grid lead and replace grid condenser with stock unit having approximately same value. Padder condenser value is critical and stock replacement will not do while grid condenser value is not critical.

**RCA (GE).** Slipping dial on rubber friction type dial models . . . Slip ¼ in. bushing from an old knob over shaft. Solder it to shaft where rubber gasket originally appeared. Now slip AK 55 dial drive rubber over bushing.

**RCA, GE.** Many recent models using Bradleyometer variable resistors. If these become noisy remove the covers, with cloth, apply vaseline.

**RCA "MAGIC EYE."** Fluorescent glow crosses over on strong stations, or does not change enough on any station . . . Change value of resistor connected from ray control electrode to ground. Make it larger if the ray crosses, smaller if it doesn't change enough.

RCA VICTOR HF2, HF4, U130

Distortion . . . leaky .025 coupling condenser from 6J5 phase inverter to 6F6. Also check .1 condenser between 6J5 second audio and other 6F6.

RCA RO23

Weak . . . replace 8000 ohm resistor connected between screen and cathode of rf. and if.

RCA RO-23

No reception, set smokes . . . inspect pilot light socket for loose terminals which cause leads to short.

RCA VICTOR R4

Oscillation . . . open 8 mfd (C-16) in a can with several others. Replace with 8 mfd, 500 volt unit.

RCA 5B

Dead on low frequency settings of dial . . . reduce screen voltages on 1A6 and 1A4 tubes by replacing 25,000 screen resistor with 50,000.

RCA C6-1

Noisy, even with volume in off position . . . Suspect 85 ohm section of candohm resistor unit.

**RCA C6-12**

Low Volume . . . Check volume control for grounded center arm.

**RCA VICTOR 6-K-2**

Intermittent cutting off of set and dial light . . . small rivet in center of band pilot light shorting to ground.

RCA T6-9

Crackling, fading . . . . voltage divider on rear underside of chassis making erratic contact with lug. Replace with separate resistors of 3500–13000–85–40–175 ohms.

RCA VICTOR T6-9, C6-2, T6-1

Hum with the volume control in the extreme minimum position . . . if filter condensers are good, reverse either the voice coil or the hum-bucking leads.

RCA R7

Low volume, oscillation . . . Check 14,300 ohm resistor between the high voltage and the screen grids. This resistor often gets as low as 5,000 ohms, resulting in high voltage on the screen grids. This causes the 8000 ohm resistor between screen and cathode to heat and increase value.

**RCA-VICTOR R7.** Crackling . . . Frequently due to eyelet in chassis through which grid lead to 24 is brought up. The eyelet is not in any electrical circuit, but when it works loose the capacity of the grid lead passing through it varies with respect to ground. Remove or solder the eyelet.

**RCA R7. (WEST. WR10, GE S22)** Rubber friction roller of dial wears out . . . Remove tuning dial by loosening its two setscrews and remove roller from shaft. Cut off a piece of rubber tape, not friction tape, 8½ inches long and ½ inch wide and wrap it tightly around the shaft, in the position of the old roller, layer over layer. The tape will form a new roller.

**RCA R7 (WESTINGHOUSE WR10, GE S22).** Slipping dial . . . Groove wears in rubber friction roller but not exactly in middle. Remove dial, loosen screws holding shaft to chassis, remove roller from shaft and reverse. Replace dial while holding shaft and roller firmly down against dial and tightening shaft holding screws. (I.F. 175 kc.)

**RCA T7-5**

Distortion, high plate current in 6F6 output stage . . . Increase bias resistor to its normal value and distortion will disappear.

**RCA 7U2**

Dead, no plate voltage. . . . Usually caused by C32, a .25 mfd condenser bypassing high voltage filters. Replace with 600 volt unit.

**RCA VICTOR—8BT6**

Noisy, intermittent . . . air dielectric trimmers shorted intermittently by metallic fuzz. Flash with high voltage to burn off fuzz. Condenser across secondary of antenna coil may be flashed without disconnecting if wave band switch is turned to right setting.

**RCA R8**

Oscillation . . . check 4 mfd condenser (C14) bypassing plate of 27 oscillator.

**RCA VICTOR R8**

Rubber ring on dial drive assembly slips on shaft . . . make thin metal washer the size of the rubber ring. Slip washer over shaft and hold in place by a small pin through shaft and soldered to washer. Then pin ring to washer.

**RCA T-8-14**

Oscillation. . . . Grid leak on rear top of main tuning condenser has changed its resistance. Replace with identical unit.

**RCA D9-19**

Weak, tuning eye will not function, second i.f. trimmer will not peak . . . This is a radio-phono combination, examination of the second i.f. transformer disclosed the trimmers soaked in oil that had dripped from the phono motor. Clean trimmers thoroughly and realign. Use oil sparingly on the motor.

**RCA 9K**

Set dead, no screen voltage . . . Check candohm resistor mounted under rear of chassis. Resistance should be 22,000 ohms.

**RCA VICTOR 9K**

This receiver has a five band dial but only four positions of the band switch. A stop is provided to eliminate the dead position. This should always be in place when the set leaves the shop otherwise a complaint of one dead band might be received.

**RCA VICTOR 9K, 9K1**

Dead at 550 kc end of dial . . . replace the small condenser on top of condenser gang and connected to grid of 6J7 oscillator with a .0001 mmf mica.

**RCA 9K1**

Cutoff on strong signals . . . Check mica condenser coupling r.f. stage to first detector.

**RCA 9K1**

Intermittant, tuning eye operative even though set cuts off . . . replace .01 mfd. audio coupling condenser between 6F5 plate and 6F6 grid.

**RCA 9K2**

Noise in audio amplifier . . . reheat all connections on 6F5 socket, especially cathode to ground junction.

**RCA 9K2**

Intermittent operation, operation restored if set is jarred . . . replace audio coupling condenser between 6F5 and 6L6 with .1 mfd 600 volt.

**RCA VICTOR 9K3**

Insufficient bass . . . shunt a 25 mfd., 25 volt bypass across the 6L6 cathode resistor.

**RCA 9K3**

Chokes up on strong signals . . . look for high resistance leak between cathode to filament of 6H6.

**RCA 9T, 9K2**

Poor reception on broadcast band, O.K. on short waves . . . replace screen resistor on 6L7.

**R.C.A. 9SX**

Hum on new sets, also buzzing noise . . . connect additional 2 mfd. 200 volt filter across rectifier plate to chassis.

**RCA 9U**

Distortion. . . . Check 20 mfd cathode bypass on 6L6 output tube, for leakage or short.

**RCA R10**

Noise similar to loose tube elements . . . may be caused by loose metal grommet rattling on chassis. The control grid lead of the first detector passes through this opening and undoubtedly picks up the small induced voltage thus generated and amplifies it greatly.

**RCA R-11**

Fading after few minutes operation . . . Replace '27 in A.V.C. socket with Sparton 485.

**RCA-VICTOR C11-1**

Set changes volume badly when speech-music control is varied . . . Install new capacitor pack. This pack is on the front of the chassis and connects to both volume and speech-music controls.

**RCA R11-GE 62**

Intermittent . . . replace C 18 a .1 mfd. condenser in A.V.C. network. This condenser located in capacity pack and can be distinguished by white lead that goes through resistor board.

**RCA R11**

Distortion on powerful locals, a.v.c. doesn't generate sufficient voltage to keep r.f. from overloading detector . . . connect 2 meg. resistor between junctions of R10 and R11 and R16 and R17

**RCA 11.** Set stops playing at intervals after 27 a.v.c. tube has been replaced . . . Use an old type, straight-side' 27 in this position. Excessive heating is probably at the root of the trouble.

**RCA-VICTOR C11, C13.** Intermittent reception, volume periodically rising sharply to nearly full output and then dropping back to normal . . . This is "cut in" rather than "cut out" trouble and to cure it replace audio coupling unit at the front right of dial, looking at the top of chassis. Tone compensation condensers open up. Be sure to get the improved unit for replacement as an original would probably have the same trouble eventually. Do not cut the leads as new leads come with replacement. Unsolder old leads at volume control and tone switch arms.

**RCA R12.** Motorboating . . . Replace type 47 tubes and connect a 5,000 ohm resistor in series with the screens to prevent recurrence of the trouble.

**RCA C13-2**

Excessive hum level . . . open 8 mfd. a.f. plate bypass. Replace with 8 mfd. 250 volt unit, clipping red lead on capacitor.

**RCA 13K**

Fades after several hours of operation . . . check C85 and C86, 10 mfd filter condensers which are separate units connected in parallel. When one of these open, set fades.

**RCA 15K**

Intermittent . . . broken or shorted voice coil. Replace with new cone.

**RCA VICTOR 15K**

Magic eye inoperative, lights up but does not close . . . movable arm of tuning tube control shorting to metal cover. Due to the design of this control the clearance at this point is very small when the arm is put under tension. Take control apart and bend arm so it clears

**RCA RADIOLA 17**

Oscillation over upper half of dial . . . Change 1000 ohm grid resistor in second r.f. stage to 2000 ohms.

# RADIO RETAILING'S "Service Shortcuts"

**RADIOLA 17**

No reception . . . look for open section in voltage divider located on chassis sub-base of socket power unit. From where output of rectifier feeds into divider, value of sections in their order are 500, 4,000, 2,500, 200 and 1,900 ohms.

**RADIOLA 17**

**Bad hum that cannot be taken out by hum controls . . . shorted filter choke; replace.**

**RCA R-17-M (G. E. BX)**

Hum, no reception . . . check tubular electrolytic condensers for open or decreased capacity. Oscillation with signals heard in background . . . also caused by same trouble.

**RADIOLA 17, 18, 50**

Erratic action of volume control at maximum and minimum settings . . . movable arm of control jumps over outer terminals due to springiness of arm. Remove chassis from cabinet and bend outside terminals of control up sufficiently so arm cannot ride over them.

**RADIOLA 17, 18, 50**

**Repeated breaking of condenser drive cable . . . Due to scraping of cable on edge of drum. Install new cable, rotate control knob fully in one direction and then the other several times. If scraping is noted remove dial scale from drum and file edges to assure better clearance. When replacing scale put it slightly off center, more toward the edge of the drum on which no filing has been done.**

**RADIOLA 17, 50**

Unstable . . . screw loose on terminal board making poor contact. Tighten all screws.

**RADIOLA 18**

**Oscillation when new tubes are installed . . . locate neutralizing condenser under chassis and turn counter clockwise till oscillation ceases.**

**RADIOLA 18 D.C.**

**No plate voltage . . . Open 1,000 ohm plate resistor located in power unit. Connect a 20-watt, 1,000 ohm replacement from binding post 7 to binding post 9 for permanent repair without necessity of removing and replacing chassis.**

**RCA RE-20**

Tone control noisy, volume decreases in bass position . . . replace small choke in metal can located below chassis. As this choke may be difficult to obtain it may be replaced with a midget filter choke.

**VICTOR RE 20**

Loud hum . . . open .1 mfd condenser from cathode of 27 second detector to one side of $\frac{1}{4}$ watt 1 meg resistor. This condenser is in condenser pack and has two blue leads.

Oscillation over entire dial . . . open .002 mfd 400 volt condenser from plate of second detector to cathode.

**RCA-VICTOR R-21**

Low hum, strong motorboating when the 47 behind the 80 rectifier is removed . . . one megohm resistor from terminal 3 on phono terminal strip shorting to terminal 4. To test, short terminal 3 and 4 with screw-driver. If hum does not increase the trouble is at this point.

**RADIOLA R21**

Motorboating . . . Check 1 mfd condenser (C14 in diagram) which bypasses the screens of r.f., first detector and i.f.

**RCA D-22-1 Volume Expander**

**Lack of expansion, drop in volume when expander is turned on . . . replace part #11608 consisting of two 1 mfd and one 4 mfd condensers. These are C-208, C-209, and C-210 in the schematic. Also check R-203, a 100,000 ohm resistor in the plate circuit of the 6L7 for drop in resistance. If operation still unsatisfactory check C-201, C-202, and C-206.**

**Excessive hum with switch in phone position can be remedied by replacing C-106, an 18 mfd condenser (part #11496) in the plate circuit of the 6C5 first audio stage.**

**RADIOLA 21, 22. Apparent short between red and maroon B plus lead and chassis. If short develops when tube is inserted and disappears when the tube is removed from 22 sockets look at plate prongs to see if these touch chassis. Screws holding sockets down loosen due to speaker vibration and sockets shift.**

**RCA R27**

Insensitive . . . connect a .01 mfd condenser from plate to terminal to grid terminal on the r.f. coil.

**RCA R27**

**Speaker rattle after a few months of use . . . Remove set from cabinet and glue two pieces of cork at top and bottom of place where speaker cone comes. These should be just thick enough to come in contact with the cone, forcing it back slightly.**

**RCA R-28. Speaker rattle, sounds live voice coil striking pole, but is rarely this . . . Cone is screwed to speaker frame only at bottom, allowing top part to vibrate against frame on loud signals. Screw top edge of cone to frame with short 4/36 machine screws and nuts. Holes are already in frame, so no drilling is required.**

**RCA 26**

A.V.C. action weak, noisy. . . . Check a.v.c. plate choke. Also check C 18, C 20, C 21 for shorts.

**RCA R28.**

**Loud "putting" noise despite good tubes, correct voltages . . . Caused in many cases by oscillating mixer section of 2A7. Remove wire feeding screen voltage to this tube section and insert an r.f. choke in series, bypassing from the screen to ground with a .5 condenser.**

**RCA VICTOR R-28-P. Set operates ok on broadcast but is dead on shortwave band . . . Look for shorted trimmer condensers on band-change switch. Mica frequently breaks.**

**RCA R-28P**

Noisy . . . defective r.f. coil mounted in shield on top of chassis.

**RCA R28P. Violent oscillation all over dial . . . Probably an open circuited 4 microfarad electrolytic screen by-pass condenser. It is mounted under the chassis in a common container with a second 4 mike unit. Change both to prevent a call back.**

**RCA R-28, R-28 BW**

Oscillation . . . Replace two mfd. screen and plate voltage bypasses.

**RCA R28, R28P (GE K50, K50P). Noise, sounding like loose connection . . . Probably one of flexible leads of the 57 plate choke rubbing against green 500 ohm 2A5 cathode resistor between r.f. choke and rear of chassis. Gurgle and squawk after tubes heat . . . Probably open filter block. (I.F. 175 kc.)**

**RCA M30. Faulty control of volume . . . Usually caused by change in resistance of carbon unit located in remote control box. The correct value is 70,000 ohms. Check the volume control resistance before installing the carbon unit as its value may have changed, necessitating some compensating difference in the fixed unit. The cotrol should check at 50,000 ohms. Use a slide resistor to determine the correct total resistance.**

RCA M30. Lack of complete manual volume control is usually an indication of trouble in the a.v.c. circuit.

**RCA M-30**

No control of volume . . . replace green wire in cable that runs from set to control unit.

**RCA 30, 30A. Burned out 876 ballast tube . . . When customers refuse to spend money to replace it wire two lamp sockets in parallel in its place. Place a 75 watt electric bulb in one and a 100 watt size in the other.**

**VICTOR R32**

Normal except for loud hum . . . suspect the 20 ohm resistor across the heater of the 27.

**VICTOR 32.** Open speaker fields are often easily repairable. Remove cover and look for burned or broken wire. Usually these are accessible.

**VICTOR R32**

Noisy volume control . . . when replacing controls in this set use a 10,000 ohm unit. Disconnect the brown resistor that biases the 26 r.f. tubes and connect to one side of new control. Connect antenna to other side, ground center arm. This change will increase selectivity and give the control longer life.

**RCA-VICTOR R32.** Neutralizing adjustments . . . Some of these sets do not have holes in the top of the chassis to permit entry of insulated screwdriver. Sets frequently neutralize perfectly without plate but oscillate all over the place when it is replaced, especially when new tubes have been installed. Most trouble is at high-frequency end of dial. Grasp the rear 26 nearest the 27 detector while the metal place is off and oscillation will occur. Neutralize while holding this tube, carefully adjusting the neutralizing screw nearest detector, and the set will operate ok when the plate is put in place.

**VICTOR RE 32, 45.** Background noise, lack of sensitivity . . . Replace 27 detector with a 56.

**VICTOR R32, RE45, 57. To repair cones take an old one and cut out a piece 1 7/16 round. Take a piece of old panel and cut out two pieces the same size, drilling a 7/16 hole through the center of both. Coat the cone with glue. Now take the two panel pieces and put over the cone with the piece of old cone. Put a 7/16 bolt through the center holes, tighten and let dry.**

**RCA R32, RE45, RE52.** Low volume, all plate voltages ok . . . Check for loose connection on power plug into pack from chassis. Spring contacts on female section frequently corrode sufficiently to reduce heater supply values.

**RCA R32, R52, RE45.** Intermittent reception, little volume, voltages ok . . . See if cone has become torn around fibre washer at center. It will be necessary to remove the speaker to discover such a break.

**RCA R32, R52, RE45, RE75.** Whistle in background on all stations, reception otherwise ok . . . Generally due to open 500,000 ohm resistor across half second ary winding of interstage push-pull audio transformer.

**RCA VICTOR 34**

Vibrator noise over entire tuning range after new vibrator is installed. . . . Unsolder secondary leads to vibrator points and twist together before resoldering.

**RCA M34**

Noisy . . . Check volume control cable shield at chassis for poor ground connection. It frequently loosens or breaks off near base of vibrator.

**RCA M 34** Vibration loosens mounting. Secure two pieces of rubber or felt about ½ inch thick. Place these behind set on bolt, one each side of bulkhead, compressing tightly with nut. On Chrevrolets and other cars having light bulkheads which permit shimmying of chassis place 6 by 8 inch steel plate under smaller one furnished by manufacturer, holding it in place with 8/32 bolts passed through holes drilled in four corners.

**RCA M34, GE B40.** Speaker rattle or sizzle. Try centering cone. Remove from case and look for filings at pole pieces. If there is no hole in screen for centering punch one ⅜ before re-installing as drawing speaker up with nuts on face of chassis may twist frame and throw cone off center. If voice coil glue loosens don't try repair. Replace. Vibrator works ok but set is dead. Place paper scraps between all contacts and check from each high side to ground on chassis. Shorts indicate blown condensers across contacts. If found, replace vibrator base. If no blown condensers check for one between B plus lead on speaker (2nd from right looking into back of set) and chassis ground. If dead short is found trouble is usually in intermediate cans shorting to coils or blown 4 mike in pack. To insulate cans, glue cardboard discs inside covers. Rattle. Tighten eyelet in center of speaker screen. Unstable vibrator operation. Check small rivets holding armature to channel section of springs and tighten by pounding if loose, removing armature for job. Field current and pilot current on but tubes don't light. Poor soldered joint between small r.f. choke L.2 and field wire lead.

**RCA M 34, GE B40. Set starts late, or only after racing motor . . . Replace 6A7. Cuts out permanently after starting up ok, or no reception though set sounds alive . . . Resolder connections on oscillator coil farthest from antenna lead, being careful not to overheat or short lug to frame. Volume ok on high-frequency end but poor at low . . . Replace antenna coil if trimmers seem ok. No sensitivity on high end . . . if trimmers are ok check .5 mfd. condenser across cathodes of 78 and 6A7, which also causes intermittent noise pickup from vibrator when poorly connected. Howl on strong carriers similar to microphonic tube . . . If replacing 6A7 causes no change replace 400,000 ohm yellow resistor on resistor board with 500,000 ohms and connect .0001 condenser across this resistor if set lacks punch. Extreme lack of sensitivity . . . Replace 400,000 ohm resistor with 250,000 ohms. Lack of audio punch . . . Replace 60,000 ohm resistor across a.f. transformer secondary with 100,000 ohms. Pronounced buzz from vibrator and no signal . . . See if oscillator tube filament pront is shorting on diode prong of 6B7. To mount set on Model A Ford where no heater is used . . . mount between choke rod and accelerator rest with speaker facing seat, cutting off extension gas cutoff lever. This is a tight but neat fit. Do not mount this set in any but vertical position as vibrator unit will bear against container causing unstable operation and contact sparking.**

*RCA R34, R35, R39, RE57. 90 per cent of the trouble experienced with these receivers may be traced to the 70,000 ohm red and green resistor in the plate circuit of the first audio stage, the 1½ meg. red and white resistor in the detector control grid circuit and the 1½ meg. blue and green resistor located under the resistance board.*

**VICTOR 35.** Low volume or no reception. Turn on set and permit tubes to warm up, setting dial on strong local. Remove detector and then replace quickly. If set plays for few seconds and then fades out replace detector screen resistor.

**RCA R35**

Intermittent fading, noisy. . . . Remove cotter pins on variable condenser shaft and insert washers of the correct thickness to take up play.

**VICTOR R35. Weak reception. Commonly either open detector screen resistor or first a.f. plate resistor. The first is located under resistor board on chassis. To replace connect pigtail unit of 1½ megohms to two inside lugs on side of board toward the center of chassis. To replace a.f. unit loosen pack but do not remove and tip up bottom sufficiently to clip out green and red pigtail resistor on terminal strip, replacing with 70,000 ohms.**

**RCA R35**

Intermittent fading, noisy. . . . Remove cotter pins on variable condenser shaft and insert washers of the correct thickness to take up play.

**VICTOR R35. Weak, distorted reception. Examine resistor R14 mounted on filter-capacitor block between terminals 6 and 7. Correct value is 70,000 ohms.**

**RCA R37.** Gradual loss of volume . . . Control grid lead to 2B7 is rubber-covered wire, shielded. It passes close to bleeder resistors and heat sometimes melts rubber, permitting short to shield. Rewire with cotton insulated wire. (I.F. 175 kc.)

**RCA R-37, R-38 (GE K-60, K-65)**

Components subject to breakdown: two 10,000 ohm carbon resistors, one connected between B plus and all screens except that of 2A5, other between same screens and chassis. Use 10 watt replacements. Electrolytic condenser block also source of trouble.

**RADIOLA 41 AC. Microphonic howl and low audio howl. May be caused by open by-pass condenser across secondary of first a.f. transformer.**

**RCA 42, 48. Defective volume control. Check r.f. 24's for plate to screen short to avoid repetition of the trouble. Such shorts put abnormal current through the controls but otherwise affect reception very little.**

**RCA-VICTOR 44.**

Fading on locals . . . May be due to corroded center friction contact of volume control arm.

RADIOLA 44, 46

Difficulty in aligning . . . Probably due to shorted turns on the small, universal-wound plate coil. Replace this coil.

**RADIOLA 44, 46.** Set plays on one or two stations but it seems impossible to align tuning condenser . . . Replace the first, unshielded, r.f. coil, which is frequently affected by moisture and climatic conditions.

**RCA 44, 46.** To tune in police calls . . . Trimmers may be adjusted to pick up 1712 kc. stations and still get 95 per cent of the broadcast band. Trimmers are hidden at front of set chassis and it is necessary to remove the chassis from the cabinet to adjust them. Right hand trimmer, on the detector, has a habit of shorting. Install slightly thicker piece of mica and re-align.

**RCA 44, 46.** Loss of volume, selectivity, sensitivity after several years of use. If voltages and tubes check ok trouble is usually caused by wear in the gang condenser, permitting the rotor sections to shift. Re-align these by means of the adjusting screws at each end of the stator sections. Select a station between 600 and 650 kc. and adjust for maximum volume. Then adjust the trimmers at the 1,500 kc. end and repeat both operations once again. A 235 in the 2nd r.f. stage will improve tone on local stations and low volume settings.

**RADIOLA 44,46 AC.** Low, or no plate voltage. Often due to grounded coupling reactor in detector plate circuit. This is in small, brown housing beneath tuning unit and is insulated by thin pitch coating. Slip insulation between choke and chassis.

**RADIOLA 44, 46, 47.** Squeals and howls . . . Check contact made by little wiping clips fastened to bottom of stage shields and see if they have sprung or are dirty.

VICTOR RE 45 PHONO

Low Volume . . . adjust pickup magnets as close as possible by squeezing with pliers. Adjust armature. If rubbers have hardened, replace.

**VICTOR RE45, 52, 75.** Chassis shorts. Often caused by steel needles falling down from phonograph compartment and shorting socket lugs to ground.

**RCA 46.** Oscillation experienced, identified as too small an antenna load . . . Make sure all shields and grounds are ok, then connect a .001 or .005 condenser from antenna to ground and re-align antenna stage. Tighten up entire condenser gang while set is open as shifting of either rotor or stator plates is quite common.

**RCA-VICTOR 47.**

Fades on locals, volume can be brought back by snapping a.c. switch on and off . . . Plate supply of first and second r.f. tubes feeds through phono-record switch and poor contact here is usual cause of grief.

**RCA 48. Cutting in and out of reception is sometimes caused by sluffing off of the plating on tuning condensers. Hum, noticeable only when records are played, is cured by a 5,000 ohm resistor shunted across the secondary of the pickup input transformer.**

RADIOLA 48

Intermittant . . . . examine plates of variable condenser for filings. The plates of this condenser are made of a magnetic material and should be kept clear of filings. Blow out thoroughly with air pressure.

RCA 48

Dead or intermittent . . . Check the detector plate choke under the oblong shield at right of tuning condenser Also, the r.f. choke under the shield a left of tuning condenser.

**RCA 50, 55, 59. Poor volume, no dx. Remove a.v.c. 27. If volume immediately improves disconnect .1 mfd. condenser in power pack fastened to one end of 1 meg. resistor and usually wired with blue lead. Connect new condenser from this point to ground. For temporary repair simply omit condenser.**

RADIOLA 50, 80

Distortion . . . replace 110,000 ohm resistor from B plus to cathode of second detector. This resistor decreases in value and supplies excess bias voltage to this tube.

RCA-VICTOR R50, R55, RAE59

Distortion and lack of volume . . . Check primary of interstage transformer. The winding with the yellow lead opens up. Disconnect the yellow lead from the number 5 terminal on the 8-terminal strip of powerpack. Continuity test will probably show open or high resistance.

**RCA R50, GE H32, R55, RAE59.** Sets play only when 27 a.v.c. tube is removed . . . Look for open resistor in a.v.c. return, also for high negative bias on r.f. and i.f. control grids. Oscillation . . . Usually caused by open circuit in .1 mike screen by-pass condenser. Fading . . . Look for open or leaky .1 by-pass across resistor in a.v.c. circuit, usually found in the power pack connected to the blue lead from the condenser block.

**RCA 55.** No reception except powerful locals, voltages, tubes ok . . . Check, preferably by substitution, .1 mike condenser connected between blue and black leads, located in capacitor pack mounted on separate power unit. Cut loose blue lead at resistor mounting board and substitute 600 volt tubular replacement from vacated terminal to ground. Trouble is generally high resistance leak of the order of 1/10 megohm, which upsets a.v.c. circuit. (IF 175 kc.)

RCA R55

Fading . . . check the .0024 mfd condenser across the plate and cathode of the a.v.c. tube for open or leak.

**VICTOR RE57.** Set dead . . . Remove panel mounting rivets carefully, turn panel over and check value of 2 watt resistor in detector circuit. It should be 1 or 1½ megohms.

**RCA RAE59.** Flat tone quality when used close to high-powered local stations . . . Trouble is in a.v.c. action. Over control is exerted. Look for 500,000 ohm resistor from plate of a.v.c. tube to ground. Open the ground end and insert a 300,000 ohm resistor in series, replacing the ground connection. Now release the r.f. and i.f. leads from the plate of the a.v.c. tube and place them at the junction of the two resistors, by-passing this junction to ground with a ¼ mfd. condenser.

RCA 60

Fading, distortion . . . open secondary of audio coupling transformer.

**RCA 60.** Noisy reception . . . . Look for bad r.f. plate choke in r.f. transformer assembly.

**RCA 60. Low volume or no signals and low plate voltage . . . Measure resistance of black carbon 20,000 ohm bleeder resistor in pack. Usually has decreased in value. Replace with 3 or 5 watt unit.**

RADIOLA 60

Weak . . . usually 20,000 ohm bleeder resistor, connected between plate supply and cathodes of 27s in r.f. and i.f. stages, is at fault due to large decrease in resistance. After replacing this component, however, volume is often not up to expectations, and voltages and continuity tests will fail to disclose additional defects. This receiver has no first audio stage, uses a 27 in gridleak detection coupled to a 71A output tube.

**RCA 60, 62.** Low volume. Check for decline in value of the 20,000-ohm bleeder resistor located beneath the pack.

**RADIOLA 60, 62, 66, 17, 18, 33. Rear bearing for gang condenser shaft is simply hole drilled in plate. Wear permits wobble and resulting frequency change sounds like motor-boating, especially at high-frequency end. Secure piece of brass 3/64 in. thick, ⅜ in. wide and 3¼ in. long. Bend it at right angles ⅜ in. from one end. Holding the brass horizontally, the short "leg" down, insert it from side to side under the shaft between the second and third condenser, jamming it firmly between shaft and base.**

RADIOLA 62

Dead, low plate voltage, high bias on all tubes . . . suspect mica condenser connected from plate of second detector to ground.

RADIOLA 64

Fading, intermittent reception, stations received below their original setting . . . connecting tabs on oscillator series trimmer condenser have snapped.

RADIOLA 66

Dead, loud hum . . . shorted bypass condenser across plate and cathode lugs underneath socket of second detector tube. Replace with a .0024 mfd.

RADIOLA 66

Dead, except for loud hum . . . look for shorted .002 mfd. bypass from plate to cathode lugs of second detector socket.

RADIOLA 66

Dead, loud hum . . . look for shorted bypass across plate and cathode terminal of second detector; replace with .0024 mfd unit.

**RADIOLA 67. No control of volume . . . Nearly always traceable to open 310 ohm end section of voltage divider, located in tuning chassis. Difficult to check because placing of an ohmmeter across this section will not show it up as one side is grounded and the other is only about 4.000 ohms above ground. Use a 25 watt replacement.**

RCA R-73

Fades after few minutes of operation . . . check for open of the 10 mfd cathode bypass on the 55 second detector.

**RCA 78 (GE 125). Defective detector reactor choke in square can fastened to chassis side . . . Replace with 5,000 ohm audio transformer, wiring primary and secondary in series aiding. Or use the secondary alone.**

RCA R-78

Loud hiss with tone control in high position. . . . Replace 10,000 ohm resistor (R25) in series with (C35) .005 mfd condenser in plate circuit of 46 output tube.

RCA 80

Poor tone . . . the 110,000 ohm resistor connected from the i.f. plate to second detector cathode has decreased in value affecting the bias on the latter tube. Replace with 5 watt resistor.

**RADIOLA 80. Noisy reception is complaint . . . Examine i.f. transformer coupling 1st detector to 1st i.f. stage. This unit has a copper shield disc between its windings. If disconnecting the control grid connection of the 1st i.f. tube does not eliminate the noise replace the transformer. Other transformers sometimes cause similar variety of noise but the one mentioned is the most frequent offender.**

RADIOLA 80

No control of volume . . . Open 18,000 ohm resistor in screen grid circuit of 1st r.f. Check 14,300 ohm and 110,000 ohm resistors in same circuit before installing replacement as new unit will burn out again if these have dropped materially in value.

RADIOLA 80

Fading, especially at low frequency end of dial while tuning . . . Remove flaked cadmium finish from variable condenser gang plates by disconnecting leads, flashing with 300 to 400 volts d.c.

**RCA 80-82. Loss of volume and poor tone. Examine black enamelled bias resistor for 45's, under chassis, for bad soldered joint.**

RCA 80-82-86

Continual rasping of speaker . . . 600 kc. trimmer loose from chassis vibration.

**RCA 80, R50, R55. Static-like noise when volume control is in off position . . . Due to breakdown of interstage transformer and may only show up after set heats. Replace interstage output, housed in one assembly.**

RCA RE81

Motorboating . . . Clean condenser wipers, install .1 mfd. condensers between junction of R14 and R15. Connect 10 mfd. 50 volt electrolytic from green lead on volume control to ground. Positive foil of this condenser goes to ground.

RCA 85T

Weak . . . check for shorted turns in antenna coil. This is rather difficult to check since the total resistance is only 0.5 ohm.

RCA 85T

Weak . . . check for shorted turns in antenna coil. This is rather difficult to check since the total resistance is only 0.5 ohm.

RCA 85T

Weak, plate voltage low. . . . Check 330 ohm and 33 ohm bias resistors connected in series with rectifier negative and ground.

RCA VICTOR 96E, 96T, 96T1

Motorboating . . . open second filter condenser or open .1 mfd condenser from bottom of antenna coil secondary to ground.

RCA 96K6

When replacing audio coupling condenser use a .00025 paper condenser otherwise motorboating and oscillation will result.

RCA VICTOR 96T

Oscillation, motorboating . . . open 5 mfd bypass from screen of 6F6.

RCA 96 T2, 96K

Intermittent reception. . . . Check socket prongs under push button assembly for short.


**Alliance "Even-Speed" PHONO-MOTORS**

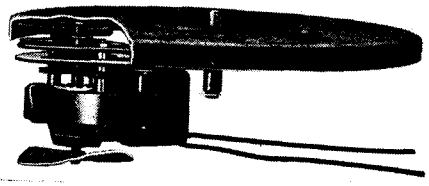

*"Even-Speed" Model 80 A Dependable Friction Drive Motor at a Sensational Price.*

• Even-Speed Model 80 is available for operation on 110 or 220 volt, 50 or 60 cycle source at 16 watts input. Simple and quiet in operation — no gears — smooth positive friction rim drive. Good regulation characteristics for uniformity of table speed. Amply proportioned bearings — large oil reserves. Motor and idler plate shock mounted to mounting plate for low vibration transfer to turntable and motor board. Forced ventilation for cool operation. Slip type fan precludes possibility of injury. Mounting plate maintains correct turntable height regardless of mounting board thickness. Available with 8, 9, or 10 inch turntable top. Maximum depth below base mounting plate, 2 1/16 inches.

*Constant Speed*

The name "Even-Speed" means constant speed under all normal load, voltage and temperature variations. The Model 80 shown above is just one of several, precision built phonograph motors now being made by Alliance. Each is a quality motor and built for years of service. For more information on Alliance Even-Speed Phono-Motors, ask your jobber or write direct.

•

*Address Department TT*

**ALLIANCE MFG. CO.**

**ALLIANCE, OHIO**

RCA 96T4, 96T5, 96T6

Pushbutton antenna trimmers will not tune . . . look for short to rivet between back to back band switch terminals. Both are indicated as 8 in the diagram although there should be no electrical connection.

**RCA TMV-97-C.**

**When using this oscillator be sure the shielded lead from the output connection is fabric-covered or the B-battery will run down in the event the shielding touches the output jack.**

RCA 98K

Line noise when tuned automatically, decreases when "dial turning" button is pressed . . . Noise is induced into

RCA 98K

Line noise when tuned automatically, decreases when "dial turning" button is pressed . . . Noise is induced into set by motor windings. Connect .01 mfd 600 volt condenser from extreme right hand terminal of tuning switch to chassis.

RCA VICTOR 100

Low volume . . . . leaky antenna coupling condenser which blocks the a.v.c. action. Replace with similar higher voltage unit.

**RCA 100B SPEAKER. Burned out coil . . . Re-wind bobbin full of No. 26 d.c.c. copper wire, then use a dynamic speaker output transformer with a low impedance secondary. This will give improved tone and volume.**

RCA M101, M104, M108, M109

Noisy . . . Replace leads from stators of condenser gang to grid caps.

**RCA 102. Line cord burned out . . . When replacing with new cord be sure to roll a piece of mica over the resistance asbestos and tape, allowing mica to be ½ in. larger than the resistance wire. This wire runs to the socket of the 37 and when set is moved around the socket lug frequently cuts into the asbestos, shorting the wire. Mica goes into the set under the socket. Tape or tie line cord so that it stays fastened to the chassis.**

**RCA 106. The a.c. model can be used with single pentode output tube models with considerable improvement in tone. The field is about 450 ohms. Use it as the bias resistor.**

RCA M109

Dead from 550 to 900 k.c., weak on remaining portion of dial . . . Open 100 ohm resistor in antenna filter. This resistor along with a choke and condenser are contained in a small metal can located at a point where the antenna enters the chassis. Remove can and replace resistor.

**RCA 110. Tracking condenser shown on circuit diagram as number C-31 appears to be missing . . . This condenser has a minimum of 15 and a maximum of 70 mmf. Try inserting one small enough to be placed between oscillator coil and chassis. Adjustment to about 50 mmf. will give maximum deflection at 600 kc. while rocking tuning condenser. Sensitivity will be uniform over entire dial. Apparently this condenser is occasionally omitted through error in production.**

**RCA 118, 211.**

**Intermittent operation or fading .015 coupling condenser C28 partially opens. In later production this is a .02. Replace with .02, 600 volt. Connects from 42 grid to 6B7 plate and is located under main resistence strip. Align at 460 kc.**

RCA 118, 211

Distortion, all voltages check with service sheet. . . . Replace cathode filter in 6B7.

RCA 120

Distortion, circuit and voltages check O.K. . . . Connect a 150,000 ohm resistor between yellow lead on volume control and common screen circuit. This raises the bias on the 6B7 slightly, reducing plate voltage drop in plate coupling resistor. Oscillation when volume is increased . . . check screen bypasses and filter from Bx to ground.

RCA 120

Oscillates when aligned . . . replace cathode bypass on 58 r.f. with .25 mfd unit.

RCA VICTOR 120

Motorboating, no signals . . . . check for open condenser in three section electrolytic block located to right of gang condenser. The offender is usually the screen grid bypass.

**RCA 121. Motorboating . . . Open 4 mike section of capacitor pack (I.F. 175 kc.).**

**RCA 121 (GE K-64)**

**Motorboating . . . If fingertip on control grid of rearmost 58 stops oscillation, remove red lead coming from C-28 in 3 section electrolytic pack and replace with single 8 mfd. unit.**

RCA 128

Weak, distorted . . . 4 mfd cathode bypass on 6B7 leaking or shorted.

RCA-VICTOR 140, 141

Code interference . . . install wave trap in antenna circuit. One can be made from old 456 k.c. transformer.

R.C.A. VICTOR 143

Noisy, intermittent hum . . . replace 500 ohm cathode resistor on 76 tube.

RCA 143, 242

Periodic hum accompanied usually by distortion . . . Replace (C45) cathode bypass on first audio with 10 mfd. 50 volt unit. Also replace (C46), a 4 mfd. 450 volt electrolytic connected from same cathode to B plus.

RCA 221

Hum, especially on stations . . . open 4 mfd condenser in pack. Connects from R6 (20,000 ohms) to ground.

**RCA 221**

**Bad hum . . . leaky 4 mfd. cond. in capacity pack, No. 6703—C 22, disconnect blue lead and replace.**

RCA 233

Ballast tubes burn out quickly . . . replace ballast with 125 watt house lamp. This is a 32 volt set and will receive the correct filament voltage when the 125 watt lamp is substituted for ballast.

**RCA 241B. Intermittent reception . . . Corrosion where leads are welded to coils, both input and output transformers.**

RCA VICTOR 260

Intermittent . . . failure of .05 mfd a.v.c. filter condenser in the r.f., first detector, and r.f.

RCA VICTOR 261

Distortion, weak signals. . . . Look for 60,000 ohm 1 watt plate resistor overload. Usually caused by leaky or shorted 4 mfd condensers (red leads) located in capacitor can and connected to each end of this resistor. Replace resistor with a 2 watt unit, connect two new 4 mfd. dry electrolytics in place of suspected condenser, after clipping off red leads close to can.

RCA 262, G. E. M107

Crackling noise . . . Check push-pull audio transformer between driver and output stage by imposing an equal load on each plate lead of the transformer. Low voltage on one lead will indicate defective winding. Replace transformer.

RCA 281, 262

I.F. won't hold alignment . . . solder leads from r.f. transformer to insulated eyelets through which they pass.

Oscillation on high frequency end with sensitivity control advanced . . . replace i.f. cathode and screen bypasses.

RCA 281

Distortion on locals . . . make sure 76 and 6D6 tubes in special a.v.c. circuit are O.K. Hum . . . check 42 output tubes for plate current balance.

**RCA 321. Phonograph plays but not the radio . . . Check for short in condenser having blue lead to terminal near oscillator padding condenser. When replacing be sure to include 30,000 ohm resistor in original position. Use 4 mike unit with 500 volt rating.**

RCA 330, 331 (G. E. K-78, K-79)

Oscillation blankets reception when volume control is adjusted near maximum setting . . . suspect open in 4 mfd. condenser, component of a 10.4 mfd. electrolytic block located under power transformer.

RCA 331

Strong buzzing . . . . connect a .001 mfd condenser from center terminal of volume control to the side lug of control that connects to 60,000 ohm resistor. This will bypass excess r.f. currents.

**RCA DUO 380HR. To test neon level indicating lamps . . . Connect suspected lamp, in series with 200,000 ohm fixed resistor, across source of a.c. voltage. This may be the regular 110 volt supply line shunted by a suitable voltage dropping potentiometer. Connect high resistance a.c. voltmeter across output of potentiometer and vary this adjustment. The lamp should not light before 52 volts is applied and must not require more than 64. If otherwise they are defective.**

RCA 381

Intermittent crackling noise . . . replace both 6.3 volt dial light as the originals are arcing in the filament wire.

RCA 810K

Weak reception . . . check antenna coil for open or band switch for poor contact.

RCA 811 K

Dead, no voltage on plates of 6N7 phase inverter . . . Check 1100 ohm section of candohm resistor.

RCA 811 K, 812 K, 816 K

A.f.c. pulls-in on one side of resonance only, cannot be adjusted normally . . . Replace 22,000 ohm bleeder from candohm resistor to cathode of oscillator control tube 100,000 or 150,000 ohms. Realign r.f. circuits after this is done.

RCA 813K

Noisy on automatic tuning . . . clean contacts on muter switch which operates by end-torque of motor.

RCA VICTOR 867

Dead on dial tuning, operative on push-button tuning . . . look for shorted stator on oscillator tuning section of gang condenser

RCA 911K

Candohm resistor burned, shock when chassis is touched . . . a.c. line uses one spare terminal of the 5T4 socket. Socket leaks to ground, replace socket.

RCA 1939 AUTOMATIC TUNING MODELS

Dial rocks back and forth when buttons are depressed . . . Insert small spring behind the flywheel between motor and washer so that motor will disengage when current is removed.

RCA 1939 AUTOMATIC PHONO

Will not complete record after playing several . . . bend clutch pressure fingers out slightly. See that cabinet is level.

RCA 1939 ELECTRIC TUNERS

If station indicator won't come to stop but keeps moving back and forth tighten set screw on motor flywheel.

## REMLER

REMLER 40

Noisy, fades intermittently . . . replace R14, a 400 ohm 1 watt bias resistor on the 41; also C9, a .1 mfd. bypass across this resistor. Check (R17) the 15,000 ohm 5 watt carbon screen dropping resistor for 6A7 and 6F7.

REMLER 60

Loss of volume after a few minutes operation. . . . Check for internal short in positive legs of C14 and C15 filter condensers. This shorts out speaker field.

REMLER 62

Cuts off with whistle on resonance with strong signal. . . . Check for badly leaking .1 mfd. 6F6 bias bypass.

## SEARS ROEBUCK

SEARS-ROEBUCK 4585

Distortion . . . shorted second detector plate bypass condenser.

## SCOTT

SCOTT CUSTOM BUILT

Some of these use neon tubes as voltage regulator which tend to oscillate under certain conditions. Shunt .5 mfd condenser from high voltage lead of neon to ground.

## SENTINEL

**SENTINEL AC-DC 560. No signal . . . Check for open 8 mike section in 8-8-4 block connected as follows: Black, common negative. 8 mike positive to one side of filter choke. 8 mike positive to other side of choke. 4 mike positive to cathodes of 25Z5. All negative connections are, incidentally, independent of chassis.**

SENTINEL 90 B 167 S

Frequency jumps several kc. and returns . . . replace oscillator coil, part 3429.

## SILVER

**SILVER 30. Dial belt will not stay in groove . . . Chip "V" deep enough to allow cable to come flush with surface of pulley, wrap fine wire around ends of cable, then tin. Also tin the "V" cut in pulley, then solder cable to ends of "V."**

## SILVER-MARSHALL

SILVER MARSHALL 30

Weak or no reception . . . check 400-ohm resistors in cathode circuits of 24s in rf stages for opens.

Intermittent . . . v-shaped springs on socket prongs corrode and work loose or break causing shorts with adjacent prongs. Springs are designed to keep prongs from spreading, but really are not needed; remove them all from set when the trouble develops.

**SILVER MARSHALL 36A. Breaks into oscillation after operating satisfactorily for a short time, insertion of analyzer cable in any socket clears up trouble and makes test difficult . . . Trouble is defective r.f. choke in series with first i.f. amplifier tube's cathode.**

**SILVER MARSHALL 37, 38, 39, 782. Distortion at low volume level on local signals . . . Replace second 24 from front of set with 35 or 51, change minimum resistor to 100 ohms (on Bakelite strip with one end grounded and other to volume control) and connect a 25,000 ohm resistor betwen screen of 35 and high voltage side of volume control.**

SILVER MARSHALL 60

Distortion . . . replace bias cell on 6F5. Also change 1 megohm grid return resistor on 6F5 to 250,000 ohms to prevent grid from going positive on audio peaks.

SILVER MARSHALL MODEL R

Insensitive, especially on low frequency end of broadcast band . . . replace R8, 80,000 ohm cathode resistor on detector. Also R7, 3500 ohm cathode resistor.

SILVER MARSHALL

Dead . . . Replace 6500 ohm resistor in 56 tube circuit (fourth tube to right looking from rear).

## SILVERTONE

**SILVERTONE** field-coil resistance data:

| | Number | Ohms |
|---|---|---|
| King-made Silvertone | 90 | 2500 |
| | 94 | 2500 |
| | 95 | 2500 |
| | 100 | 2500 |
| | 111 | 750–750 |
| | 111B | 750–750 |
| | 112 | 750–750 |
| Colonial No. 36..... | 1150 | 9000 |
| 41..... | 1152 | 1450 |
| 41C..... | 1154 | 1450 |
| 38..... | 1170 | 9000 |
| 41..... | 1174 | 1450 |
| 42..... | 1174 | 1450 |
| 39..... | 1250 | 2500 |
| 49..... | 1252 | 2500 |
| 41P..... | 1260 | 9000 |
| 36P..... | 1260 | 9000 |
| 37..... | 1310 | 1450 |
| 37..... | 1312 | 1450 |
| 47..... | 1320 | 1450 |
| 47..... | 1322 | 1450 |
| 47..... | 1324 | 1450 |
| 47..... | 1326 | 1450 |
| 37P..... | 1330 | 1450 |
| 46..... | 1370 | 2500 |
| 44..... | 1390 | 2500 |
| 44..... | 1400 | 2500 |
| 44..... | 1402 | 2500 |
| 44..... | 1404 | 2500 |
| 44..... | 1406 | 2500 |
| 44..... | 1408 | 2500 |
| 41..... | 1420 | 1450 |
| 42..... | 1420X | 1450 |
| 50..... | 1430 | 1450 |
| 48..... | 1450 | 1450 |

SILVERTONE

Often these sets will not track over the entire tuning range. When this trouble is encountered, try aligning the i.f.'s a few kc. higher or lower than the recorded peak.

SILVERTONE

Noise control on rear of chassis burns up . . . look for short in plate circuit of 6A8G tube near plate terminal of socket. Replace control with 750 to 1100 ohm pot.

SILVERTON 29

Weak, oscillation . . . replace filter condenser with 450 volt type.

**SILVERTONE 42.**

**Unsatisfactory reception from 950 to 540 kc., noise and whistles accompanying signals . . . Ground one side of the antenna coil to the chassis. Connect external ground to chassis after this is done to further improve dx reception and reduce hum.**

SILVERTONE 109

Low sensitivity, especially on 550 end. . . . Primary of antenna coil is resistance wire, very brittle and usually breaks. Replace with copper wire.

SILVERTONE 110

Hum, weak . . . check 8 mfd wet electrolytic on top of chassis for low capacity and leakage.

SILVERTONE 110

Unstable . . . tighten all ground screws throughout chassis, also those on gang condenser. Pigtail gang rotor. Replace 9000 ohm 5 watt carbon resistor (black and red) and 10,000 ohm 3 watt with a 10 watt. Also connect .002 condenser from detector plate to grid to reduce R.F. component in audio; reneutralize.

**SILVERTONE 110, 111.** Defective volume control. Replace with 10,000-ohm unit and ground through 5 or 10 watt, 500-ohm resistor in series with the cathode circuit to give better control on locals.

**SILVERTONE 172, 36, 41, 37. To increase pep in these sets, volume controlled by primary coil movement into secondaries . . . Loosen setscrew on volume control shaft on rear of condenser gang and move primaries ¼ to ½ in. farther into secondaries. Tighten screw, align trimmers on gang to cut out oscillation and insert 35 type tubes in r.f. sockets instead of 24's.**

SILVERTONE 821, 1827 (COLONIAL 656)

Abnormal hiss on all stations except strong locals . . . poor contact on rotor wiper springs. Clean and bend for better tension and realign set. (i.f. 480 k.c.)

SILVERTONE 1310, 1312, 1330
COLONIAL 37, 37P

Distorted, unstable, weak or dead . . . common fault of these receivers is leaky or shorted bypass condensers.

SILVERTONE 1390, 1400, 1402, 1404, 1406

Dead, weak, distorted signals on powerful locals . . . Check bypass block mounted in can next to 27 tube. Detector plate bypass section (.1 mfd) is usually at fault. Replace with higher voltage unit. Check 1000 ohm resistor in plate circuit of some tube for overload caused by short.

**SILVERTONE 1506.** No reception . . . Look first for a shorted .01 mfd. bypass between the 47 plate and grid. This is a common ailment.

**SILVERTONE 1570, 1574.** Electrolysis in output transformer . . . Commonly encountered due to use of paper winding form which evidently contained some chemical heightening this effect. Use a bakelite form when repairing or place Empire cloth between winding and paper form. Pre-heating and sealing in some moisture-proof compound also recommended.

**SILVERTONE 1570.** Trouble due to electrolysis . . . To completely cure this for all time use a dpst switch to replace the spst switch in order that the B minus lead as well as the A positive may be broken. Change oscillator coil to one using bakelite form or lay Empire cloth between form and winding.

SILVERTONE 1570

Weak . . . Look for corrosion around control grid of second detector where it goes through hole in chassis; slip spaghetti over lead to insulate from chassis. May be further pepped up by substituting almost any 175 k.c. 4 lead I.F. transformer for resistance first and second I.F. network. Leave 20M resistor previously used as a filter with the addition of a .1 mfd. paper tubular to bypass this resistor or the increased gain will cause motorboating.

**SILVERTONE 1580.** Improving sensitivity . . . Use 200 ohm resistor in place of 400 ohms found in series with volume control.

**SILVERTONE 1584.** Continual blowing of .003, 600 volt condenser connected across primary of power transformer . . . Due to surge built up in primary winding when line switch is opened. Use an 800 volt condenser as a replacement, connecting it between the line side of the on-off switch and the chassis.

**SILVERTONE 1640. Improving tone and reducing hum . . . Use .001 condenser in place of original .003 tone control unit. Replace 100,000 ohm resistor and .1 mike condenser in lead to midpoint of driver tube's gridleak with .5 mike condenser from gridleak midpoint to ground. Use .003 condenser instead of .02 from one leg of power transformer primary to ground. Use grounded electrostatic shield between primary and secondary of power transformer if set operates on 25 cycles. The 60 cycle jobs do not need such shields and if shields are provided they should be disconnected. Replace 8 mike, 475 volt electrolytic condensers with a 14 mike, 440 volt unit. In replacing power transformer use one with a separate filament winding having a 20 ohm adjustable center tap resistor across it for one of the 46 driver tubes. The adjustment is quite critical. To impart greater brilliancy to tone replace auto-transformer found mounted on 12 inch speaker with a new auto-transformer having fewer laminated core sections. Failure of volume control to reduce volume to zero is due to coupling between second i.f. and detector grid leads, under the chassis. The i.f. lead connects from coupling choke and detector grid lead from tuning condenser. Spread these leads far apart.**

**SILVERTONE 1640.** Undesirable time lag in a.v.c. system, weak stations interrupted during static bursts . . . Replace the .1 mike fixed condenser in the a.v.c. circuit with .01. Hiss or feedback in 283 tube . . . Insert r.f. choke in red plate lead of tube. If one does not cure trouble put another in the other plate lead. This noise may affect nearby sets as well as the receiver itself.

SILVERTONE 1640

Motorboating . . . replace the screen bypass on the i.f. amplifier.

**SILVERTONE 1640. Blurping at high volume levels . . . Reverse transformer secondary leads to grids of 46's.**

SILVERTONE 1640

Motorboating . . . check .2 mfd screen bypass for open.

**SILVERTONE 1652, 1654. Poor selectivity in models equipped with .005 condenser in i.f. stage . . . Remove second i.f. untuned transformer underneath chassis and replace with part R6415A, a tuned i.f. transformer. Realign both i.f. stages. If set oscillates reverse connections on plate coil in second i.f. stage, being careful not to disturb connections to trimmer from plate and B-plus. Rotor must go to plus. Any good tuned i.f. input transformer which peaks at 175 kc. can be used if a Colonial part is not easily obtainable.**

**SILVERTONE 1711. When changing to standard tube types . . . Replace 951's with 32's. Replace 950's with 49's, not with 33's as the latter draw excessive filament current and will blow ballast tube.**

**SILVERTONE (Sears-Roebuck) 1712, 1713. Distortion, weak signals . . . With batteries disconnected check with ohmmeter from B minus (red and black) to chassis. It should read 700 ohms. If less test 35 mike, 20 volt condenser across 700 ohm, 1 watt carbon resistor for full or partial short. It is found, together with two 8 mfd. capacitors, in a square cardboard box bolted to chassis. Leads are brown and black. Fading . . . Sandpaper band change switch contacts. (I.f. 175 kc.)**

**SILVERTONE 1732. To increase "pep" . . . Install a 10,000 ohm resistor in the screen-grid lead instead of the 15,000 ohm unit normally used in this position. Screen voltage should increase from 60 to 80 volts.**

SILVERTONE 1760

No reception look for shorted 1 mfd. condenser bypassing second i.f. plate supply. Usually the 1000 ohm resistor in same circuit needs replacing.

**SILVERTONE 1801 AC-DC.**

Undue hum after regular filter replacement . . . Tie the cathodes of the 25Z5 together. The filter arrangement of this set is identical with that of a Sparton 57 so that a filter block for this latter make will work quite satisfactory if the original replacement is not obtainable. Care must be exercised because the color coding of the leads supplied with the two blocks is not identical. Both schematics must be on hand to avoid wiring error.

SILVERTONE 1802A, 1803A, 1807

No reception at high frequency end. . . . Open 2 mfd. tubular cond. from oscillator coil to ground. Set dead. . . . Check open 17M and 32M ohm sections of Candohm voltage divider.

SILVERTONE 1802, 1803

Oscillation . . . test 160 volt 1 mfd. condenser between chassis and high voltage centertap of power transformer for open.

SILVERTONE 1821, 1827

No reception . . . short in 0.1 mfd., 300 volt tubular condenser bypassing plate supply of 78 tube in second i.f. stage. Use 400 or 600 volt replacement. 1,000 ohm (⅓ watt) resistor in same circuit likely damaged also by overload due to condenser breakdown.

SILVERTONE 1824-1830

Weak or dead . . . check 4 mfd. cond. from 78 screens to ground. Also check tuning meter for open. Wave change switch dirty; clean with alcohol and small brush.

SILVERTONE 1829

Weak, tuning meter becomes hot . . . shorted .1 mfd condenser in plate of 6A7. Meter may be replaced with 1,000 ohm resistor, connect same as meter.

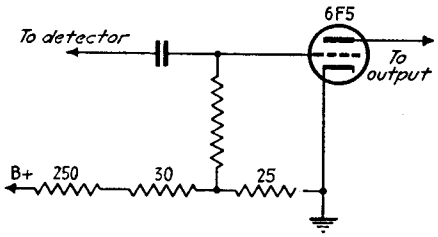


SILVERTONE 1850

Poor control of volume . . . oversensitive 951 tube. This condition can be eliminated in most cases by increasing the normal 1½ volt bias to 3 volts.

SILVERTONE 1850

Intermittent, weak . . . check 4½ volt "C" battery. If the voltage is not up to full value operation will be erratic.

SILVERTONE 1926

Code interference. Repeak at 445 k.c. (originally 480). Retrim the two padding condensers mounted on gang at 1500 kc., also repad 600 k.c. trimmer while rocking selector knob.

SILVERTONE 4426, 4427, 4446, 4447, 4526, 4546

No gain in r.f. section . . . . look for high resistance leak in wave band switch which disturbs a.v.c. on this stage.

SILVERTONE 4589

Cuts out on frequencies higher than 770 kc . . . check 0041 mfd condenser bypassing oscillator coil to ground. Replace with .005 mfd unit.

SILVERTONE 4615

Blows fuses. . . . Insulate shield at bottom of vibrator section of chassis. Also, insulate filament chokes from candohm resistor.

SILVERTONE 4720

Dead . . . remove control grid lead from 1C7G mixer; grasp lead clip in one hand and place index finger on grid cap of tube. If set plays look for short between primary and secondary of antenna coil.

SILVERTONE 4786

Large 140 ohm flexible resistor located at 6V6G socket gets hot to smoking point . . . look for trouble in the .003 mfd condensers from plate to cathode of 6V7G tubes.

SILVERTONE 6403, 6404, 6405, 6406, 6492, 6496

Hum, low volume . . . check the antenna loop for opens at the corners. This also may cause intermittent howl.

## SIMPLEX

SIMPLEX 5DA

Static, noisy . . . check oscillator coil. Replace coil to eliminate trouble.

SIMPLEX P

Dead . . . replace .00008 mfd condenser from negative filament of first detector to chassis.

## SONORA

**SONORA. Avoiding high price of replacing special tubes . . . Rewire for 27's in the r.f. detector and first a.f. and a 45 in the output. Place five-prong wafer sockets over regular four-prong types in r.f. sections. Fasten with small bolts. Bring up connections. Carry cathode leads from chassis through holes in rivets holding coils. Make cathode return to powerpack through one side of unused filament wiring. Install new transformer with following specifications: 700-volt c.t. secondary, 2.5-volt c.t. filament secondary and 5-volt secondary. Change bias for 27's to 500 ohms and place grid return to 45 in filament center tap. Discard ballast tube. Job costs less than half the price of new special tubes.**

**SONORA. Mushy tone, poor audio quality in this and other sets using Peerless dynamic speakers . . . Burnish contacts of voice coil bands to heavy copper strip (secondary) of output transformer. Re-assemble and tighten well.**

**SONORA 28. Frailty of chassis permits plate coil in first r.f. transformer to twist out of line. Symptom is oscillation with volume control full on. Twist coil back into line.**

SONORA 705

Hum, poor volume control action . . . look for open 8 mfd electrolytic under resistor—condenser bank. Replace with 300 volt unit.

## SPARTON

### SPARTON I. F.'s

| MODEL | | MODEL | | MODEL | |
|---|---|---|---|---|---|
| 9-X | 172.5 | 35 | 172.5 | 75 | 456 |
| 10 | 172.5 | 36 | 172.5 | 75-A | 456 |
| 12 | 172.5 | 44-P | 172.5 | 75-AX | 456 |
| 13 | 172.5 | 45 | 172.5 | 75-B | 456 |
| 14 | 172.5 | 46-P | 172.5 | 76 | 456 |
| 14-A | 172.5 | 53 | 456 | 77 | 345 |
| 15 | 172.5 | 56 | 172.5 | 78 | 172.5 |
| 15-X | 172.5 | 57 | 456 | 80 | 456 |
| 16 | 172.5 | 58 | 456 | 81 | 456 |
| 16-AW* | 172.5 | 60 | 900 | 81-A | 456 |
| 17 | 172.5 | 61 | 456 | 82 | 456 |
| 18 | 172.5 | 62 | 456 | 83 | 456 |
| 25 | 172.5 | 63 | 456 | 84 | 456 |
| 25-X | 172.5 | 63-AX | 456 | 85-X | 456 |
| 26 | 172.5 | 65 | 456 | 86-X | 456 |
| 26-AW* | 172.5 | 65-T | 456 | 104 | 456 |
| 27 | 172.5 | 66 | 456 | 111-X | 172.5 |
| 27-A | 172.5 | 66-T | 456 | 134 | 456 |
| 27-X | 172.5 | 67 | 345 | 333 | 456 |
| 28 | 172.5 | 68 | 345 | 475-A | 456 |
| 28-X | 172.5 | 70 | 345 | 475-AX | 456 |
| 30 | 172.5 | 71 | 456 | 478 | 172.5 |
| 30-A | 172.5 | 71-B | 456 | 620-X | 172.5 |
| 30-B | 172.5 | 72 | 172.5 | 691 | 345 |
| 30-C | 172.5 | 72-PQ | 172.5 | 750-A | 172.5 |
| 33 | 172.5 | 73 | 456 | 750-X | 172.5 |
| 33-A | 172.5 | 73-AX | 456 | 870-A | 172.5 |
| 33-B | 172.5 | 73-BX | 456 | 870-X | 172.5 |
| 34 | 172.5 | 74 | 172.5 | | |

*The short-wave superheterodyne converter in these models operates on an intermediate frequency of 900 k.c.

**SPARTON AC7, 62, 63.** Replacing worn-out friction dial drives . . . Remove chassis from set. Remove spring tension arrangement from shaft and replace with brass rod or old variable condenser spacer tube, drilled to fit snugly over shaft. File brass rod down until it is spool shaped, similar to spools used on sewing machines. This may be done by putting the rod of spacer tube on a small bolt, rotating the bolt in an electric drill and holding a file against it. The spool should now be covered with tape and metallic-xed (a cement) in place. It should then be soldered to the knob shaft, easily removed by lifting the spring before the tape is cemented to the shaft. Remove the paper dial from the set by taking out the round brass clip holding it in place. Cut the slotted brass disc at A & B, shown in diagram, wrap piece of dial cable around the drum portion of dial as shown in 2. Solder in place at spot marked C and wrap two turns around spool on shaft. Splice or solder ends at C, replace paper dial and the job is done.

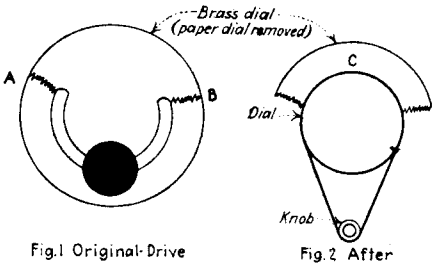


Fig.1 Original Drive  Fig.2 After

SPARTON 7A

Bursts into full volume with volume control set low. . . . Replace leaky cathode bypass.

SPARTON 16

Drifts, weak, whistles . . . check the connections on the oscillator coil. One connection is fastened by a small screw which works loose in time.

**SPARTON 14.** Intermittent reception, operation restored by jarring cabinet . . . This is a common trouble which may be attributed generally to a single cause in these models. The wire running from the intermediate transformer to the 58 looses some of its insulation where it passes under the shield-can. The short is very difficult to actually see and may be guarded against with a short length of spaghetti on the lead.

**SPARTON 16.** Intermittent noise, erratic operation, become increasingly noticeable if any part of chassis or tubes is tapped . . . Due to looseness of condenser rotors on shaft. Rotor hubs are cast. Drill and tap, with a bottoming tap, the hub of each rotor for two short 6/32 setscrews. Or solder one end of each hub to the shaft with a large, hot iron and spatterless flux. Also desirable to ground center of shaft with flexible pigtail in place of original brush.

**SPARTON 16.** Extreme motorboating . . . Insert a static shield between the oscillator stator and the adjacent r.f. stator on the tuning condenser gang. This in no way impairs performance as far as selectivity and sensitivity are concerned. The undesirable condition is due to r.f. from the oscillator getting to the second detector, blocking the set through a.v.c. action and releasing periodically.

**SPARTON 26.** Fading caused by mechanical contacts, all shields and obvious parts apparently tight . . . Die-cast rotors of condenser gang frequently make high resistance contact to shaft, this resistance showing up only on Wheatstone bridge analysis. Drill and tap holes in each rotor through to shaft and insert setscrews.

**SPARTON 36.** Short-lived vibrators . . . Connect .01 mike, 1600 volt condenser across secondary winding of power transformer in the eliminator unit. Install the condenser in all sets serviced as precautionary measure, adding cost to bill.

SPARTON 36

Vibrator burns out . . .connect a .01 mfd 1600 volt condenser across secondary winding of power transformer.

**SPARTON 40.** No a.v.c. action . . . Try replacing a.v.c. 37 first. If this does not cure trouble check the 160 ohm resistor connected to r.f. cathodes, chokes and ground.

**SPARTON 40.** B-battery dead, or heavy current drain on eliminator . . . Replace shorted 1 mfd. condenser used to by-pass screen of 438 power tube.

SPARTON 57 A.C., D.C.

Dead, no plate voltage on all tubes

. . . open 1000 ohm molded resistor located between filter unit and plate of 6D6.

**SPARTON 61, 62.**

Tunable squeal all over dial in these a.c.-d.c. models . . . Check 5 mike, 165 volt section of filter condenser block for leakage. If present, cut green lead and replace with 8 mike. 200 volt unit.

SPARTON 61, 62

The shielded grid lead running between the 25Z5 and 43 often shorts due to insulation crumbling from heat exposure. Check this when servicing these models.

**SPARTON 61, 62.** Distortion, not due to bad tubes or incorrect voltages . . . . Check 5 mfd. section of filter condenser. It is across the speaker field and tapped filter choke and is equipped with a yellow lead coming out of the block.

**SPARTON 65, 66.** Oscillation . . . See if metal braid shielding on control-grid lead of type 78 tubes, either one, has been pushed down accidentally when removing or installing tube packing, or changing tubes. If so, pull shields up to their full length.

**SPARTON 65, 66.** Improving selectivity . . . Remove L5 (part A-11041) and install new L5 (part A-11535). Remove C3 (part A-10973) and install new C3 (part A-11474). Connect one condenser of C3 across primary and connect other condenser across secondary of L5. Remove resistor R-11 (part B-5243-34) and install part B-5458-1 2,200 ohm., .25 watt unit. Remove resistor R-15 (part B-5458-33) and install part B-5458-31 (30,000 ohm) .25 watt unit.

**SPARTON 67, 68, 691.** Vibration . . . Remove small piece of rubber in middle of rear edge of chassis base plate and place small strips of one inch masking tape along edges of base plate, preventing plate from vibrating against chassis frame. Stick one end of tape to top side of plate and fold the other end around so that it sticks to the bottom. Masking tape is obtainable at most hardware or paint stores.

SPARTON 69

Weak or no reception . . . trace leads connecting low ends of r.f. chokes to condenser block. Disconnect leads from block and test for continuity from the now vacant lug to chassis. A reading indicates this section shorted. Replace with a 125 mfd. 400 volt unit.

**SPARTON 69A, 79A, 930, 931, 301.** Fourth section of band-pass selector, just preceding r.f., sometimes cannot be tuned to resonance with first three sections, producing weak reception and loss in selectivity. Give first, second and third selector trimmers 3 turns clockwise. This makes slightly less tuning capacity necesary for given frequency and fourth section selector can now be adjusted for resonance . Balance set in customary manner with oscillator and output meter and re-adjust kilocycle scale on dial by loosening it on shaft and re-setting.

**SPARTON 69, 79, 79A, 89.** (Number terminal strip posts 1 to 9, from front to back.) Detector plate voltage, terminals 1 to 2, should be 180 with pick-up inserted in jack . . . If 90 to 135 check 20,000 ohm resistor and its by-pass between a.f. transformer primary and filter choke. Detector bias, terminals 2 to 9, should be 14 to 20 . . . If not check 1,200 ohm resistor from phono jack to terminal 2. With pickup in use voltage should be from 3 to 5 . . . If not check 1,000 ohm resistor between jack and terminal 2. R.F. plate voltage, terminals 5 to 6, normally 90 to 135 . . . Check 3,000 ohm resistor or its bypass between filter choke and terminal 6, in filter block. R.F. bias voltage, terminals 5 to 9, voltage normal between 3 and 5 . . . When otherwise check 110 ohm resistor between terminals 5 and 7. A.F. plate voltage, normal between 145 and 185. A.F. bias, normal between 27 and 41 . . . Trouble sometimes develops in 1,700 ohm resistor between ground and c.t. of filament winding. Lack of voltage at any terminal that can be restored by removing cable wire is caused by shorted bypass condenser in associated circuit of r.f. amplifier. Adjust screw on top of tuner, left side, for best response between 1,250 and 1,500 kc.

SPARTON 74

Dead, plate and screen voltages okeh . . . look for open 200 ohm bias resistor feeding cathodes of i.f. and r.f.

**SPARTON 79A, 89A, 930, 931, 301, 109, 110, 740, 750, 589, 25, 26.** Partial or complete open-circuit in r.f. chokes composed of very small enamelled wire wound on bobbin in all band-pass selector and fixed r.f. amplifier models . . . Break most often occurs at point where winding is soldered to ferrules at end of bobbin. This is detectable with an ohmmeter and small pocket magnifier. Remove a few turns of wire, clean with fine sandpaper, than warp a half dozen turns around the ferrule and solder with rosin core. Most of the chokes have a d.c. resistance of about 3,000 ohms and a hundred turns more or less seems to make no difference.

**SPARTON 79A, 109, 110, 930.** Oscillation "growl" while tubes are heating when using 485's in r.f. stages. Place quick-heaters in first and second r.f. sockets and detector socket, using slow heaters in third, fourth and fifth. If only one quick heater is used place it in the detector socket. If more than three are available place them in third, fourth and fifth.

**SPARTON 80, 83, 84.** Burning out of 3,000 ohm resistor part B-6061-3 (5,000 ohm part B-6060-5 in later serial numbers) . . . Usually due to failure of .2 mfd., 200 volt condenser connected from plate of a.v. controlled tubes to ground, shown as C8 in diagrams. Replace resistor and replace condenser with 600 volt unit.

**SPARTON 80, 83, 84, 85X, 86X, 104, 835.** Improving tone of cabinet models . . . Remove screws holding speaker baffle in place. Insert ⅛ inch spacers under screws, replacing only those at four corners.

**SPARTON 89A, 79A.** R.f. oscillation in serial numbers using 485 tubes. Readjust trimmers to exact resonance. If trouble persists replace .5 m.f.d. B bypass in r. f. amplifier with .25 mfd., 400 volt tubular unit. Some late chassis have it.

SPARTON 301

Hum . . . clean and tighten the ground connections on the large 7,000 ohm resistor located in back of the 50 tubes.

SPARTON 301

If hum still remains after everything is checked, clean and tighten ground connection of the large wire-wound 7,000 ohm resistor.

SPARTON 333

Spurious oscillations at high frequency end of dial . . . Replace 50,000 ohm oscillator grid leak connected from grid to cathode of socket with 1 watt 40,000 ohms. Original unit has increased value causing oscillator to super-regenerate.

**SPARTON 333.** Reception of code or police signals . . . Often caused by breaking of wire which runs from antenna equalizing condenser to r.f. section of the condenser gang. To correct, remove broken wires and solder in 6 inch length of flexible wire. Form a loop in this wire by winding a few turns around a lead pencil. This will allow slack and avoid further difficulty. In the event that the wire connecting the grid cap of the 6F7 first detector-oscillator to the antenna equalizer breaks replace with longer flexible wire run from the grid cap down under the gang condenser and thence to the equalizer.

**SPARTON 333.** Intermittent or noisy reception . . . Frequently caused by breaking of stator connections underneath condensers. Replace such leads with stranded push-back wire. (I.F. 456 kc.)

**SPARTON 333.** Hum . . . May be a floating ground at the eyelet of the 42 tube. One side of the heater circuit is grounded at this point and if the eyelet loosens an intermittent or fading hum of the same pitch as the vibrator will result. Correct by soldering two additional ground connections of the same type and in the same circuit, one at the 6F7 socket and one at the 78 socket. A grounding wire should also be run from the ground circuit heater terminal of the 75 socket over to the resistor mounting plate, which should be grounded.

SPARTON 400

Intermittent noise . . . caused by poor contact of r.f. grid return which connects to casting on bottom of coil. Solder lead from this lug to ground.

SPARTON 410

Microphonic howls and fading . . . check vitreous enameled voltage divider riveted to shielding panel. Rivets are used to secure the divider to the shield, also to make contact to the circuit lugs. To repair, solder resistor lugs to circuit lugs, also solder pumper to shielding. Since two of the divider terminals are insulated from the chassis, care should be exercised when soldering the lugs not to them to the shield panel.

**SPARTON 410.** No plate voltage on i.f. tubes and oscillator. Replace tubular condenser attached to front panel with .5 or 1 mfd., 400 volt capacity.

SPAPTON 410. Type 45 power tubes may be substituted for the 183's by rewiring the output stage filaments in series, including a half-ohm resistor in the circuit.

**SPARTON 410.** Set breaks into oscillation after warming up although all voltages, bypasses and ground connections are ok . . . Try two new 183 type tubes.

SPARTON 410, 420

Intermittent. . . inspect the resistor block for loose connections.

SPARTON 517, 557, 567

Distortion, disappears when finger is placed on grid cap of 75 tube . . . check for leaky bypass at junction of 220,000 and 100,000 ohm resistor in plate circuit of 75.

SPARTON 537, 577

Dead or weak and distorted . . . test for short or leakage in 0.1 mfd. condenser, bypassing juncture of 270,000 and 100,000 ohm resistors in plate circuit of 6Q7G. Original rated at 400 volts; replace with 600 volt unit.

SPARTON 537, 577

High noise level at all settings of volume control . . . check i.f. transformers, particularly the primaries, for high resistance opens. Test by both voltage and continuity methods as sometimes one procedure will show the coil as being okeh whereas the other will disclose the trouble.

Oscillation with volume control adjusted to about mid-point . . . push control grid of 6Q7G away from 6F6G output tube. Speaker cable wires should also be removed from vicinity of both tubes. (i.f. 456 kc.)

**SPARTON 589.** Weak reception and low speaker field current . . . Replace defective resistor with brown and silver ends, connecting primary of a.f. transformer to ground.

SPARTON 600

Motorboating. . . . Check the bias resistor on the 183 output tubes. The resistance should be 1,250 ohms but changes to 700 ohms often a few minutes operation. Replace with a wire wound unit.

SPARTON 600

Strong hum when set is tuned to resonance with a signal . . . replace .006 mfd condenser connected from one side of power transformer to ground with a .5 or 1 mfd unit. It is important that this condenser is of the non-inductive type.

SPARTON 740

Fading . . . check for leaky cathode bypass in preselector stage. To test this, disconnect volume control leads from the terminal strip. If set operates in this condition, replace condenser.

SPARTON 870

Noisy . . . terminal board on side of power unit for connection of external choke breaking down. Replace with new terminal.

SPARTON 900

Hum and noisy reception . . . this trouble is nearly always caused by poor contact between the can of the electrolytic condensers and chassis. Sometimes corrosion at the bottom of the copper can is the reason for poor contact. Often paint on the chassis prevents good contact from being made. Clean the electrolytic can and chassis.

**SPARTON 930. Fading and cutting out . . . Replace detector plate choke coil.**

SPARTON 930

Oscillation . . . check connections to r.f. coils for corrosion.

SPARTON 930

Howl at low volume . . . replace r.f. choke in plate circuit of second detector.

**Sparton 930, 931, 589. When plates of the 485's show low or no potential remove screw at side tab of cylindrical condenser at rear left of amplifier can. Remove responsible condenser by unscrewing with upward twist. Replace. Job can be done in 10 minutes without removing chassis from cabinet.**

**SPARTON 930, 931.** Replacing 483 power tubes with 45's . . . The usual method is to rewire the filaments in series to reduce voltage from 5 to 2½. This usually results in hum. A better method is outlined here: Remove the bias resistor from the center lead of the power transformer. Transfer one of the filament wires from the outer tap to which it is normally connected to the center-tap. Remove the old hum balancing potentiometer and install a 20 ohm center-tapped resistor across the filament circuit. Connect the opened end of the bias resistor to the midpoint.

**SPARTON 931, 301.** ***Hum is generally caused by nothing more serious than poorly matched push-pull 182's.***

**SPARTON 930, 931.** Reception only between 1500 and 850 kc., voltages, condensers, tubes ok. Check for cold soldered joint at 1st r.f. plate choke. While the set is open check value of 15,000 ohm bleeder resistor. They sometimes creep up as high as 67,000 ohms when heated and if found in this condition should be replaced.

**SPARTON 931. Distortion, inability to handle power . . . Look for shorted cathode by-pass condenser in block mounted in base of external audio unit. Quick repair can be made without removing block by cutting shorted condenser lead and connecting a midget 1/10 mfd., 200 volt condenser across the cathode resistor, tucking it in the bottom of the base. If slight attenuation of low frequencies is caused and customer objects mount a 2 mfd., 200 volt non-inductive replacement externally.**

**SPARTON 931. Thin tone and oscillation accompanied by high plate voltage readings and low speaker field current. 15,000 ohm bleeder has increased in value due to age. Replace with 10 to 25 watt unit.**

**SPARTON AIRPLANE DIALS.** Microphonic trouble . . . See that there is clearance between dial and cabinet. It may also be advisable to put a coat of clear lacquer on wires passing through oscillator coil so that these will not vibrate.

SPARTON MODELS

Dial does not track . . . remove chassis from cabinet, set dial pointer to correct setting. Pointer is merely pressed on shaft and works loose from vibration.

SPARTON WITH PRESELECTOR

Fading . . . all these models have die cast tuning gang on a steel shaft. Fading was traced to rotors shrinking loose from shaft. Drill hole through casting and insert setscrew into shaft or clean end of each gang section and solder to shaft.

**SPARTON EQUASONNE A.C. MODELS.** Routine trouble tests from specialist's notebook . . . Temporarily short terminals 1 and 2 with tip of screwdriver. If pronounced click is not heard from speaker check speaker connections and main filter condenser block. If power unit is ok loosen and remove terminal screw on .25 mfd. condenser shown in diagram. If set continues to operate after removal of screw replace it. On some models in which original condenser is still in place the following test may be used instead of above. This older style condenser has metal top with screw through center. Momentarily short top of condenser to side of amplifier. If spark occurs the unit is ok. If not, replace. This may usually be done without removing amplifier from cabinet by removing bottom screw going through terminal on side of condenser and bending terminal up against side of condenser, then turning condenser counter-clockwise. To install unit reverse this procedure.

Turn volume control completely off. If noise similar to static results check detector plate choke before suspecting control. If new choke cannot be ob-

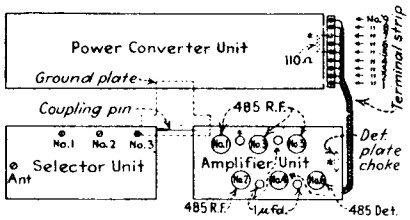


Front of Radio Chassis
*Note.-Asterix-* marks location of parts which most often become defective*

tained remove all wire from old choke form and scramble-wind the form full of No. 36 enamelled wire. Solder ends to terminals and do not use anything but pure rosin flux. Impregnate choke with commercial r.f. coil dope or something similar. If set operates but volume is low and decreases after passing half-way point on control trouble is usually due to open in 110-ohm wire-wound resistor connected between terminals 5 and 7.

By placing volume control full on (if set does not operate) and touching antenna to coupling pin between selector can and r.f. amplifier can the set should pick up some signals. If so, trouble is indicated in selector can, either a defect or bad alignment. The pin referred to is directly under the back of the drum dial. Without the selector stations will naturally be jumbled together.

After above routine tests and with volume control full on pull extra 485 tube used on selector can as amplifier almost out of socket and work it up and down so that it makes and breaks contact with the socket terminals. There should be loud clicks. If not, check for open plate choke or condenser beneath socket.

Location of tubes in amplifier unit for best reception and freedom from oscillation at 900 kc. . . . After testing tubes place best one in 1st r.f. position, next in 2nd r.f., third in detector socket then, in order, 3rd r.f., 4th r.f. and finally the poorest tube in 5th r.f. When aligning select some frequency above 1,000 kc., about 1,300 is preferable. With oscillator connected to antenna posts adjust trimmers as follows No. 3 first, then No. 2 and finally No. 1. Check back second time. Now connect antenna to selector unit and tune in some station around 1,300 and adjust antenna trimmer. If antennas are changed, re-adjust this trimmer each time.

## STERLING

STERLING MODEL F

Hum . . . insert 1500 ohm 10 watt resistor in series with field to increase bias on 45 output.

## STEWART-WARNER

**STEWART-WARNER.** Loss of volume or sensitivity after defective by-pass condenser is replaced . . . Sets are critical as to by-pass condenser values. Use exact original value of tubular type condenser, avoiding metal-cased replacement units.

**STEWART-WARNER.**

Some models of auto-radios have loud hum when volume control is at low setting . . . Loosen the r.f. coils and shield wire from volume control to a coupling condenser located under these coil cans on the bottom of the chassis. The shield should be soldered to the grounded terminal of the volume control. Hum is caused by inductive pickup from the A wire to the vibrator being alongside the wire to be shielded. Loud hum and chattering of relay, weak, distorted reception . . . Open plate circuit to one plate of 84. May be bad socket contact.

STEWART-WARNER

Bad hum . . . replace the grid resistor in the output stage with 100,000 ohms. Also tighten spring holding grid bias cell.

STEWART WARNER 91-62

Sensitivity drops after playing a short time, tuning eye will not operate. . . . Liquid leaks out of electrolytic condenser and partially shorts avc system.

**STEWART-WARNER R100A, R100B, R100E.** Distortion . . . . Check 27-plate current and voltage, which should be about 3 mils. at 115 volts. If low voltage and higher mils., replace .1-mfd. tubular coupling condenser, probably leaking. Regular 100,000-ohm ohmmeter will not show it up. Condenser is connected between detector plate choke and first audio grid. It is also a good idea to replace 45,000-ohm (red), 1-watt carbon resistor connected between r.f. plates and ground (bleeder) with a 2-watt carbon job while the chassis is open, as this is a common cause of low voltage and weak reception.

STEWART WARNER 102

Weak, distorted . . . check for open or shorted .1 mfd condenser connected between the purple and yellow resistors on the resistor strip.

STEWART WARNER R-102A

Overload on strong signals . . . try different values cathode resistor (original 45,000) as this value often critical.

**STEWART-WARNER 102A.** Quality poor, no volume . . . Check .1 mfd. condenser near 51 tube socket, detector audio coupling .02 and 2 megohm screen-grid second detector resistor.

**STEWART-WARNER 110.** Loud crackle when set is first turned on (early production models) . . . Don't look for death and destruction in the powerpack. The noise is normal, emanates from electrolytic condenser film breakdown on high starting voltages and the film quickly reforms.

**STEWART-WARNER 112.** Noise after standard suppression has been installed. Shield tone control and pilot leads from tuning head to chassis with metal braid, grounding at head. Bond shield of antenna lead to metal case of chassis.

**STEWART WARNER 116.** Hum . . . Check for following possibilities: Poor contact at grounding lug of vitreous voltage divider resistor. To cure, tighten screw used to hold down the grounding terminal and solder it in place. If this does no good cut the 230 ohm negative section out and use a separate 230 ohm unit. To cut out section unsolder from the negative terminal of the divider both the wire leading from the power transformer and the small, red resistor within the insulated sleeving. Re-solder these wires to one end of the 230 ohm resistor. Solder the other end of the resistor to ground. The grounding lug located below the shortwave switch is convenient for grounding. Keep power cord away from the .05, 100 volt isolating condenser. See that green speaker field coil lead goes to the front electrolytic condenser, the white lead to the rear.

**STEWART-WARNER R116AH.** I.f. trimmer requires frequent adjustment . . . . Caused by expansion and contraction due to temperature. Readjustment required every 2 to 3 months where weather varies widely.

**STEWART-WARNER R116.** Set gets off calibration and loses power on lower end of dial . . . . Trimmers on gang are soldered, poor connections develop here. Look for opens or high-resistance, resolder and balance.

STEWART WARNER R-116X

Weak and distorted . . . Shorted 0.1 mfd. condenser between positive terminals of electrolytic condensers shorting speaker field. Replace with 600 volt unit.

STEWART-WARNER R116X

Dead . . . replace oscillator plate resistor with 20,000 ohms, also replace the condenser at B plus end of this resistor with .1 mfd.

STEWART WARNER R120A

Weak . . . short out cathode resistor of oscillator tube.

**STEWART-WARNER R136, R137, R138.**

Poor sensitivity at low frequency end of broadcast band, inability to align or calibrate at 600 kc., oscillation at low frequency end of broadcast band . . . Almost always due to large change in capacity of small bakelite fixed condenser connected across oscillator shunt padding trimmer. Unit colored brown, brown, black. Replace with .000011 original replacement number 85434.

STEWART WARNER R-127A

Poor tone, oscillates . . . check tone control, often half of this unit opens.

**STEWART-WARNER R-136, R-137, R-138.** Insensitive above 12 mc. despite perfect alignment and correct voltages, shadow-meter on last two chassis mentioned contracts as if station was tuned in when set is switched to this high-frequency range . . . Due to stray coupling within set wiring. Sets up spurious oscillation of the 6A8, causing the control grid to draw current, producing an a.v.c. voltage and reducing sensitivity. To eliminate trouble isolate grid return of the 6A8 from the a.v.c. system by returning it directly to ground. The grid coil of this tube is tuned by trimmer condenser 11 in the 136, by trimmer 15 in model 137 and trimmer 16 in the 138, referring to the diagram. Shortwave section is the one wound with heavy, bare copper wire and grid return is at the top, the lead running down the full length of the coil before it is soldered to its terminal lug. The simplest way to isolate the grid return circuit is to cut the heavy coil wire as close to the lug as possible. Be careful not to cut the fine wire from another winding soldered to this same terminal. After cutting the heavy wire merely re-solder it to the grounded, threaded support lug of the coil. Re-align the set after change is made.

STEWART WARNER R-145

Severe distortion, excessive bias on the 6F5 tube . . . Trouble may be checked to 25 ohm resistor section shown above. A change of only a few ohm in this resistor will cause the trouble.

Dead . . . Check for open circuit in one of the resistors shown above. Motorboating can usually be stopped by bypassing the 25 ohm section with a 10 or 15 mfd electrolytic.

STEWART WARNER R147

Station hum . . . replace .1 mfd. screen bypass on 6A8 with .5 mfd. unit.

STEWART WARNER R 149

Hum on stations . . . connect 6K7 and 6J7 screen grids together. Remove .01 mfd. condenser and 110,000 ohm resistor connected to i.f. circuit.

STEWART WARNER R-161-D, R-16-4D

Burned out driver transformers . . . Check .0011 mfd condenser from plate to ground for leak or short. If this condenser shorts it places 135 volts directly across the driver transformer primary.

STEWART-WARNER R173

Dead . . . check for leaky audio coupling condenser which puts a positive voltage on the 6F6 output tube grid.

STEWART WARNER R180A

Insensitive, dial off calibration, impossible to align at low end of dial . . . . add .0025 mfd. condenser to the .0054 unit which is already across the padder.

**STEWART-WARNER R301, R301A, R301B, R301E.** Inoperative, especially on high frequency . . . . Check voltage of 27 oscillator. If less than 100 converter is probably cutting out. If series resistor, usually 17,500 ohms, is used in series with red plate lead, remove this resistor entirely or substitute one of lower value to supply 100 volts to plate. While chassis is open resolder connections to coils and other high frequency connections. Slipping dial mechanism . . . . Twist thin rubber band around each rubber pulley. Also check for leaky 2-mfd. plate, by-pass condenser, even though it functions ok. Leak of approximately 150,000 ohms indicates unit will soon break down. Condenser is cased and connected between 25,000-ohm, 1-watt plate supply resistors and ground.

STEWART WARNER 900

Intermittent fading . . . check the .25 mfd r.f. bypass condenser. This is the green lead on the condenser block.

STEWART WARNER 900

Serious intermittent fading in this model is usually caused by the .25 mfd r.f. cathode bypass condenser. This is the green lead in the condenser block.

**STEWART-WARNER 950.** Set dead or no pep with excessive hum . . . Check ½ mfd. condenser in cathode circuit of detector, speaker field resistor and filter condensers.

**STEWART-WARNER 950 SERIES.** Burned out volume control. Measure voltage across control and if in excess of 70 replace 20,000 ohm, three watt resistor with new unit.

**STEWART-WARNER 950.** Oscillation at low frequencies. Clean variable condenser contact clips and bend them to increase pressure. Oscillation at high frequencies. Look for open .25 mfd. r.f. by-pass condenser located close to r.f. coils. Tone distorted, set oscillates. Try replacing .25 mfd. r.f. grid by-pass condenser. If set oscillates when quick-heater tubes are used replace .25 mfd. screen-grid by-pass with .5 mfds. or more.

**STEWART-WARNER 950, R100.** Poor sensitivity and low volume. Check red resistor 66326 for low value or charring. This resistor shunts r.f. plates to minimize effect of variation in plate current when different tubes are used and if low increases load and reduces screen voltages.

**STEWART-WARNER 1171.** To reduce brilliancy of pilot light . . . Replace 15 ohm pilot light resistor with 35 ohms.

**STEWART-WARNER 1121, 1122.** To increase volume and improve tone . . . Disconnect B-plus (yellow and red lead) from side of output transformer from screen grid terminal of output tube and connect it to the high voltage side of the combination relay and filter choke. The most convenient point to connect is the cathode terminal of the rectifier tube. This raises plate potential about 40 volts. Change the grid resistor of the 41 from 510,000 ohms to 250,000. It is inclosed in a piece of large spaghetti and is connected from the 41 grid to ground. Change the permanent tone control condenser which is connected to the plate of the output tube from .01 to .006, 600 volts. It may be necessary to readjust the spring of the relay as output tube plate current no longer passes through it. Reduce the tension of the relay spring, which tends to keep the contacts closed, by stretching it slightly.

**STEWART-WARNER 1181, 1182, 1183.** Won't play unless local switch is clicked on and off . . . Change 50,000 ohm resistor on 6A7 socket to 60,000 ohms. If set goes into oscillation put a .25 mike condenser from cathode to ground on the 6A7.

**STEWART-WARNER 1181, 1182.** Bell-like rattle . . . Traceable to tubular condensers inside power transformer cover. These units break off and strike against cover. Remove four screws, pry off cover, resolder and tape condensers to transformer and replace cover. Set inoperative except for faint response on powerful locals . . . Look for broken lead on coupling condenser connected to movable arm of volume control. Mounting hint . . . Sets are equipped so that speaker may be pointed outward but trouble will be experienced in this position due to the horizontal position of the vibrator and tubes. Use side or end mounting with speaker downward.

STEWART WARNER 1236-B

Oscillation . . . replace 4 mfd filter condenser in can with audio bypass with higher voltage type.

STEWART WARNER 1251 TO 1259

No reception . . . cause is often 0.006 mfd., 600 volt tubular condenser; connected between plate of 41 tube and chassis. Part No. 83,706. Use 1,000 volt replacement.

Noise . . . lug on 0.02 mfd., 1,000 volt, metal-cased condenser, connected between line and chassis, is often pulled loose by line cord. Replace condenser and adjust knot in cord to prevent pull on new unit.

Noise accompanied by sudden volume changes . . . rotor wipers on band-changing switch have lost their extension and making poor contact with stator points.

Hum . . . this trouble also caused by open in line filter condenser.

STEWART WARNER R-1252A

Dead, except for hum. The .25 mfd condenser connected to the third tap from left of candohm resistor and bracket has low resistance leak. Replace with similar unit.

STEWART WARNER 1261

Weak on shortwaves . . . raise oscillator plate voltage by shorting 10,000 ohm dropping resistor in plate lead.

STEWART-WARNER 1845 TO 1869

Motor hums but does not run . . . reversing contacts on back switch not closing; low line voltage or improper line frequency.

Intermittent operation of motor and lights . . . insufficient contact pressure or dirty contacts on back or side switch. Set tunes broadly . . . afc contacts on side switch not closing.

Slight hum when button is depressed, not heard when button is released . . . poor or defective discriminator tube.

Signals are heard when tuning from one station to another automatically . . . muting contaction back switch not closing or making poor contact.

Set noisy electrically when starting and stopping during automatic tuning . . . insufficient antenna or mute contacts on back switch closing too late and opening too soon.

STEWART-WARNER, 3040-3049

Oscillation when tuned to weak stations or between stations can be removed by connecting a ground to the receiver.

If a ground is not available oscillation can be prevented by connecting a .01 mfd. buffer condenser from one side of the power line to chassis. In connecting the condenser, first solder one side to the chassis. Touch the other lead to one terminal of the line cord and note whether the hum increases. If the hum increases touch the condenser to the other line cord terminal. This will usually be the line cord terminal which connects to the off-on switch. Solder the condenser in this position.

**STEWART-WARNER Converter.** No reception . . . Remove both tubes and clean prongs thoroughly with sandpaper. Also see that 27 oscillator shield is not touching condenser gang. Cross-talk from broadcast band while listening to shortwaves . . . See that broadcast receiver dial is set just above 1,000 kc. and make the connecting wire from output of converter to antenna post of bc job as short as possible.

## STROMBERG

**STROMBERG 10, 11.**

**Fading, making it necessary to operate volume control well up . . . Seven hundred ohm section of voltage divider opens commonly. Replace with 10-watt unit.**

**STROMBERG-CARLSON 25, 26.** No reception . . . Examine chassis bolts. Frequently one of these extends too far and touches voltage divider.

**STROMBERG-CARLSON 25, 26.** Set starts and stops playing . . . Look for loose wire in tuning condenser compartment. Usually still in place but not well soldered. Also check 100,000 ohm fixed resistor in series with center lug of volume control. This sometimes loosens and shorts to ground.

STROMBERG 29. On-off switch and tone control unit is electrically and mechanically identical to the phonograph and pickup switch and volume control unit. When on-off switch contacts are discovered to be burned out, and the set is not equipped with a pickup, interchange the two units, making sure that the "jumper" across the pickup input is in place. This saves $1.95 until the customer wants to use a pickup.

STROMBERG-CARLSON 37

Dead . . . test for short in 0.3 mfd., 400-volt condenser bypassing plate-supply of 58 i.f. amplifier tube. Unit is section of by-pass capacitor assembly, part No. 22,702. 15,000-ohm resistor will be noted connected to defective component.

Rasping at room volume . . . speaker cone off center and scraping against pole piece. Re-center.

STROMBERG CARLSON 38

Weak, station hiss which disappears when the grid of the 58 r.f. tube is touched . . . primary of preselector coil grounded to metal braid of antenna post.

STROMBERG-CARLSON 38, 39, 40, 41

Weak reception, loud station hiss . . . if condition clears up when a finger is placed on the grip cap of the 58 first r.f. suspect the preselector coil for open or short to metal shielding.

STROMBERG 48, 49, 50, 51

Dead, tubes and voltages check O.K. . . . defective 500,000 ohm $\frac{1}{8}$ watt resistor in the plate circuit of the 55 second detector.

STROMBERG 48, 49

Dial slips . . . caused by the U washers on the friction drive mechanism binding to the shaft opening of the cabinet. To remedy: raise front of chassis slightly and insert thin rubber strip between chassis and wooden chassis support.

STROMBERG CARLSON 60

Oscillation or distortion . . . check grounding on shield can of 6B7.

STROMBERG-CARLSON 130, 140

Weak . . . This is common on new sets. The sensitivity control is on the back of the chassis. The purpose of this is to limit local signals, preventing overloads in the r.f. stage. For increased sensitivity turn the knob clockwise.

STROMBERG CARLSON 150, 155, 160, 180

Slight distortion and decreased volume . . . replace 4 mfd 350 volt electrolytic on screen of 6K7 audio amplifier. It is imperative to use a condenser with the highest possible resistance in this circuit since screen voltage is dropped through a 1 meg. resistor and any current drawn by the condenser drops the screen voltage.

STROMBERG CARLSON 160, 180

Strong hiss although tuning indicator functions properly . . . replace 6A8 with 6J7 with no other changes.

STROMBERG CARLSON 231

Intermittent hum . . . Tighten screw holding filter condenser to chassis.

**STROMBERG 635, 636.** "Mushy" or choked reception . . . See if pilot light socket shorts to chassis.

**STROMBERG 641.**

Intermittent reception or fading . . . Often caused by loose lugs on 800 ohm volume control.

**STROMBERG 641, 642.** Noisy volume control . . . Replace rear unit. Fading . . . Try replacing the front volume control unit. Continual static . . . Discard primary of push-pull transformer and go to resistance coupling, using 25,000 or 50,000 ohm plate resistor and .01 blocking condenser. Peculiar buzz or hum . . . See if 25 cycle transformer has been installed (several New York chains sold sets of this type) and if so tighten transformer laminations or replace.

STROMBERG-CARLSON 846A

Whistling and motorboating . . . Frequently caused by defective 10-ohm center tapping variable rheostat across filament winding of detector tube. Wire on this rheostat takes solder so carefully solder wire ends to lugs and center lug t case of rheostat.

**STROMBERG 846, 848.** Periodic fading, antenna control fails to function properly . . . Check small wire-wound resistor in series with antenna control, in turn shunted across antenna coil. Disconnect resistor and tighten up rivet holding one end.

## T. C. A. CHASSIS

**TCA CHASSIS.**

Used in Temple 10, Brunswick 10, Clarion 40, Bulova M501, Columbia SC31, this chassis has a tuned filter system with all inter-connections inside a can. When any section fails the entire block must be replaced. Exact duplicates are difficult to obtain so the following is sometimes used as a substitute: Connect a .0005 from the 47 control grid to chassis, a .01 from one side of switch to chassis, a 12 mike electrolytic from high voltage end of Candohm resistor to chassis, an 8 mike electrolytic from 80 filament to center-tap of high voltage winding. A tone condenser may be connected between the tone switch and chassis if desired but in most instances this has been omitted by repairmen as it is rarely used. Capacity, .02. Scratchy sound similar to defective audio transformer . . . Usually found in the Candohm. Cut wires inside unit for a considerable distance in each section with sharp knife, then solder a 10,000 ohm, 10 watt resistor across the high voltage section and a 5,000 ohm 10 watt unit across the low voltage section. The original terminals make excellent anchor lugs.

## TRAVELER

**TRAVELER.** Noise in models using a yellow coated, heavy bus wire around an r.f. coil for coupling . . . Remove heavy bus wire very carefully and see if insulation is not worn off, shorting to windings of coil underneath.

**TRAV-LER C.**

Weak . . . Check yellow resistor under chassis, mounted with a red and blue resistor. Increases in value sufficiently to almost stop reception.

## TROY

TROY 5L5, 5V5, 15

Weak . . . look for open .1 mfd 200 volt condenser in a.v.c. circuit.

## TRUETONE

**TRUETONE O52 SERIES (Wells-Gardner).** Weak reception . . . Check .1 mike condenser from 35 screen to ground. Replace 250,000 ohm, eighth watt resistor from 2nd detector 57 plate to 80 filament even if it tests ok. On load it sometimes drops plate volts from 180 to 100. Use a one-watt carbon replacement. (I.F. 262 kc.)

**TRUETONE 6K**

Crackling, vibrator and ignition quiet. . . . Antenna transformer shield can ungrounded. This condition may be remedied by removing chassis and inserting a phosphor bronze spring between the coil can and chassis bracket with a long-nose pliers. Most stores handling this set have these springs on hand.

**TRUETONE 7J**

Weak . . . Shorted .25 mfd bypass in screen of output tube. This usually burns the 20,000 ohm resistor in same circuit.

**TRUETONE 667**

High background noise on local stations . . . look for broken lead on r.f. section of gang condenser.

**TRUTONE D-689**

Mushy tone, unstable performance . . . check 6A7G for gas.

**TRUETONE D726**

Static but no reception . . . check first i.f. coil in plate circuit of 6A7.

**TRUETONE S719**

Oscillation, especially at high frequency. . . . The 57 tube shield base rivets corroded and practically insulating shields from chassis. Drill out rivets and replace with bolts after thoroughly cleaning rust or corrosion around holes.

**TRUTONE AUTO RADIO (with remote permability tuning)**

Noisy on remote control . . . open head and bond r.f., oscillator, and mixer coil cans to mounting strap with braid.

**TRUETONE AUTO RADIOS**

Noisy . . . look for defective first i.f. transformers.

## UNITED MOTORS

**UNITED MOTORS 2035. Vibrator test . . . Connect 8 volts to battery leads, remove 5 ampere fuse in 84 filament lead and shunt an ammeter across the fuse terminals. Place a good 84 in the rectifier socket. The meter should jump to 10 amperes and then drop back to 4.5 if unit is normal. Voltage from plate of 84 to ground is 300 a.c.**

**UNITED MOTORS 4038 (CHEVROLET 600249, 600565, BOP 980459).** Low or intermittently low volume accompanied by poor quality and missing bass notes . . . Check primary of push-pull input transformer carefully. Trouble is deceptive as voltages are not affected.

**UNITED MOTORS 4037**

Weak or inoperative . . . . this trouble can often be traced to shorted turns on the primary of the vibrator transformer. Primary winding consists of 4 layers of heavy wire, can easily be rewound. Check secondary for short also before attempting any repair.

Also check buffer condenser and r.f. filter condensers for shorts or leaks.

## U. S. AIRCELL

**US 10**

**Overloading . . . Check 200,000-ohm resistor in plate circuit of a.v.c. tube, also condenser from plate of this tube to cathode. Erratic reception . . . Examine resistance strip mounted tight against side of cardboard electrolytic upon which the a.v.c. circuit resistors are mounted. There is often sufficient leakage between the resistance strip and the condenser to cause trouble. Insulate with cardboard.**

**U. S. RADIO 24**

Weak or no reception on low frequency half of band . . . open 4 mfd. electrolytic condenser, connected between chassis and high voltage center tap of power transformer, (across 500 ohm bias resistor of 47 tube) is often cause, not any defect in oscillator.

Alignment . . . this receiver, having but four tubes, utilizes regeneration to increase sensitivity. Accordingly, alignment procedure differs somewhat from usual method. Before adjusting i.fs., oscillation control condenser is set to minimum capacity by turning adjusting screw counterclockwise. The i.fs. are then peaked at 455 kc. Next follows adjustment of oscillation control condenser to point of oscillation and "backing off" a quarter turn below squealing point. The i.fs. are now repeaked and oscillation control condenser again adjusted to squeal point and "backed off" a quarter turn as before. This completes the i.f. alignment.

Adjustments on the r.f. and oscillator circuits are carried out in orthodox fashion. In event oscillation reappears, oscillation control condenser is "backed off" further till oscillation ceases. The i.f. trimmers, however, are not to be touched again.

Location of trimmer condensers: r.f., on front gang condenser; oscillator high frequency, on rear gang condenser; i.f. secondary, forward screw atop i.f.-oscillator assembly; oscillation control, rear screw atop assembly; i.f. primary, forward screw on base of assembly, oscillator padder, (for adjustment at 600 kc.) rear screw on base of assembly.

**U. S. 24**

Intermittent . . . check top i.f. transformer at rear of chassis for poor connection between trimmer and grounding lug.

**U. S. 24**

**Volume control ineffective on strong signals . . . Replace control with good left hand tapered 5000 ohms carbon control and reverse center and high leads. In the original the antenna went to center arm.**

**U. S. RADIO 26, 26-P**

Oscillation . . . loose or dirty rotor wipers on condenser gang repeatedly cause this trouble. Remove wipers, clean, bend slightly to give better tension, replace.

**U.S. 27**

**Intermittent . . . leakage in wet electrolytics. Liquid on top of can causes short between positive terminal and can. Mount with vents on top. If boiling still persists replace both 8 mfd sections.**

## UNIVERSAL

**UNIVERSAL 5-10**

**Bad hum, both tunable and constant . . . .1 mfd condenser from the high side of the 400 ohm choke omitted but shown in diagram.**

## WELLS-GARDNER

**WELLS-GARDNER 02AA**

Volume control will not reduce volume completely, distortion at low settings . . . disconnect suppressor grids of i.f. tubes from series resistor (R13 in schematic) and connect suppressors to cathode. Add 5 mfd or more in parallel with C5, the cathode bypass for the 55 tube. These changes cause the tuning meter to deflect somewhat further to the right than usual, but this increase is not objectionable.

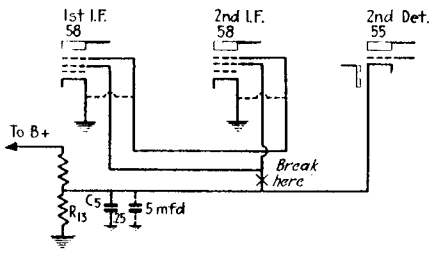


**WELLS GARDNER 2DL, AIRLINE 62-413**

Intermittent crackling . . . defective contact in Candohm resistance containing bias for avc and audio tubes. Resistance of this section is 156.5 ohms.

WELLS GARDNER 5E

Noisy . . . replace condenser between plate of 34 i.f. and grid of second detector. This is a special capacity but can be replaced with a .0001 mfd mica unit.

**WELLS-GARDNER 20 (GULBRANSEN 23). Failure of 40,000 ohm yellow resistor mounted on voltage divider . . . Due to overload, substitute 2 watt unit. The resistor goes from first a.f. plate transformer B plus to B plus of power pack or to low voltage end of field used as choke and is a filter unit.**

**WELLS-GARDNER 20 (Gulbransen 23, Griffith 20). No volume . . . Check 40,000 ohm carbon resistor attached to end of Candohm, wired between plate of 1st a.f. 27 and grid of 47's. If defective, replace with 5 watt size of same resistance and replace .5 mfd. bypass, in the condenser block (red wire) with external .5 mfd. unit rated at 600 volts. Intermittent or fuzzy reception . . . Check and, if necessary, replace .1 mfd., 600 volt and .05 bypass condensers.**

WELLS GARDNER 24

Poor tone, weak . . . . replace .01 mfd. 360 v.d.c. condenser (part No. 46 x 120) with 600 volt unit.

WELLS GARDNER 40, 40A

Bad distortion at low volume . . . remove all wires from dummy lugs on candohm resistor. The lugs can be identified by the double layer of insulating paper at these points. Interaction takes place between the a.v.c., volume control and grid bias due to leakage between these lugs.

Also, change the 40,000 ohm resistor (R16) to 500,000 ohms.

WELLS GARDNER 752, 754, 756

Weak on all stations . . . check volume control for grounded rotor.

WELLS GARDENER OEL

Distortion on strong stations when tuned exactly to resonance, reception normal when detured slightly. . . . Balance i.f. as one transformer is badly out of alignment.

## WESTINGHOUSE

**WESTINGHOUSE WR5 (Graybar 800, GE H31). To snap up sensitivity . . . Remove shield from first intermediate frequency transformer.**

WESTINGHOUSE U6F

Distortion . . . check .01 mfd 200 volt coupling condenser for high resistance leakage (about 20 meg.)

**WESTINGHOUSE WR5, 6, 7, 8.** Poor quality and low volume . . . Look for grounding of strip of resistors under chassis, lowering C bias to power tubes. Grounding occurs when heat expands resistors.

WESTINGHOUSE WR12

Dead . . . look for i.f. trimmer lugs shorted to winding.

WESTINGHOUSE WR14

Can't control volume on strong locals even with antenna disconnected. . . . The r.f. coil and volume control leads are unshielded supplying sufficient pick-up. Shield r.f. coil with large tube shield or other shield can. Also replace 8 mfd wet electrolytic with dry unit. Shield control grid lead of first 24 tube.

WESTINGHOUSE WR24

Noisy, when walking across floor or bumping the set . . . Socket prongs lose their tension and fail to make good contact with tube pins.

WESTINGHOUSE WR203, 303

Excessive code interference. . . . Set IFs to 450 and carefully adjust wave trap to minimum. Re-align all circuits. If antenna coupling transformer is used, bolt directly to chassis and run wires to set from it as short as possible. Run 6A8 grid lead down along condenser gang as close as possible.

WESTINGHOUSE WR-203, WR-303

No reception . . . look for short in 0.1 mfd., 400 volt tubular condenser bypassing plate supply of 6A8 and 6K7 i.f. stage. Use 600 volt replacement.

WESTINGHOUSE 315 WR

Noisy, cracking . . . . check 95 ohm choke under i.f. transformer located between 6A8 sockets. Replace with 750 ohm resistor.

A.f.c. operates only when approaching station from high frequency side. Connect 150 ohm resistor across 140 ohm section of large voltage divider on under side of chassis and realign i.f. and discriminator.

## WINDCHARGER

WINDCHARGERS

When the charge rate cannot be made to exceed three or four amperes check the lugs on the collector arm leads for good contact. In many cases the lugs are crimped on the lead instead of soldered. Solder all connections.

## WURLITZER

WURLITZER SUPERHETS

Noisy . . . I.F. coils wound with 6 strand litz, failure of one strand won't show up on ohmmeter but increases R.F. resistance. Cut leads, fray and scrap each strand separately and resolder.

## ZANNEY GILL

ZANNEY GILL

Oscillation . . . Check all bypass returns which are made to rivets. Soldering these rivets to the chassis will effect a cure.

## ZENETTE

**ZENETTE CH SERIES.**

**Excessive regeneration and no volume . . . Often due to defective electrolytic located in square can at far end of chassis (left side) bypassing choke located underneath chassis. Choking up when volume control is advanced or tuning dial shifted . . . Caused by 500,000-ohm plate resistor in a.v.c. tube dropping in value.**

**ZENETTE A, B, C, D. Erratic operation, squeals, overall efficiency loss . . . Replace 25,000 ohm series plate resistor with same value in 10 watt size. Check all high value resistors in detector plate circuits for 25 per cent change in value, also 1 megohm resistor in first r.f. grid return. If set is radio-phono combination keep wire from phono switch as far away from receiver circuits as possible. Put .00025 condenser from detector choke to ground for greater stability.**

## ZENITH

ZENITH 4B106 BOAT RADIO

Dead on low frequency end of dial . . . connect 10,000 ohm resistor across 15 tube. This lowers the bias sufficiently to make the tube oscillate.

When too much moisture collects on the coils of this set it often becomes inoperative. To remedy: Unscrew the two nuts holding the oscillator coil and shield close to the chassis, remove coil and shield about 1 inch from chassis.

ZENITH 4B131

**Oscillator dead . . . Remove oscillator coil, place eighth inch composition spacing washers over mounting lugs and reassemble.**

ZENITH 4B131

Dead from 550 to 700 kc . . . check for open 9,000 ohm ½ watt resistor in cathode of 15 tube.

ZENITH 4B231

Vibrator hash on all but local stations . . . replace .5 mfd 400 volt paper condenser across input filter condenser (C11 in diagram).

**ZENITH BATTERY MODELS 4F227, 5F223, 5F251**

Complaints of short "B" battery life and poor tone quality after battery voltage has dropped below 120 volts may be corrected by eliminating "C" battery and converting circuit to automatic bias. Also by bypassing plate voltage with 4-8 mfd electrolytic condenser.

To accomplish this, disconnect negative "B" lead where it connects inside chassis and connect a 300 ohm ¼ watt carbon resistor in series to chassis. Run the bias leads from the 1H4G grid and 1K6G grid to the "B" lead (yellow). Disregard green lead as "C" battery is omitted.

**ZENITH 4K401**

Oscillation . . . replace defective 1A7 tube. Motorboating . . . poor ground connection on electrolytic condenser at rivet which fastens to chassis. Solder connector to chassis.

**ZENITH 4K310**

Dead . . . disconnect diode of 1H5G and check for leakage from tube prong to ground. This condition is probably caused by soldering fluid between wafers.

**ZENITH 4P26**

Low volume, oscillation, signal cuts out when volume control is opened more than half way . . . open 2 mfd. screen bypass condenser on the 6A7.

**ZENITH 4T-26, 56**

Oscillation, hum . . . replace condenser block 22-407. Shorted or open condensers are very common at this point.

**ZENITH 4V131, 4B31**

Inoperative. . . . This set will not operate if pilot light is burned out. It is connected in series with the two 15 tubes. Replace with a 2.9 volt bayonet type bulb. Must be exact replacement for proper operation.

Noisy. . . . Replace 15 tube in first r.f. stage. Many times this tube tests perfect, replacement is only way trouble can be found

**ZENITH 5M191**

Intermittent when car is in motion, noisy, poor quality, jarring the set will cure the trouble for a short time . . . tuning cable is inserted too far into condenser coupling. The result causes the condenser to be held solid instead of resting on the rubber mounting washers. Also check the antenna connectors for noise.

**ZENITH 6B129**

Distortion. . . . Replace 8 mfd. filter condenser in power pack. Capacity of this unit has decreased.

**ZENITH 6D, 70**

Weak signals accompanied by strong A.C. hum . . . half of filter condenser across speaker field shorted: replace.

**ZENITH 6D-166**

Dead . . . check .02 mfd. tubular condenser connected to one end of the volume control. Replace condenser, leaving enough slack in the lead to prevent pulling the condenser lead loose by a slight movement of the control.

**ZENITH 6-M-90, 6-M-91, 7-M-91**

Noisy, inoperative at times . . . Check the 600 k.c. padder and tuning condenser. The ground lead to these units often breaks loose. Resolder for a permanent cure.

**ZENITH 6M-90, 6M-91, 7M-91**

Dead, intermittent or noisy when jarred . . . Look for broken connection from bottom of condenser gang to oscillator or first detector coil.

**ZENITH 6M192, 6M193, 6M194**

Noisy when jarred . . . i.f. shields grounded through one eye-bolt on can. Solder ground lead to cross-bar on top of can, making sure the nuts holding this are secure. Also check soldering lugs on tuning gang stator for good contact.

**ZENITH 6S-128, 137, 147, 152, 157**

Inoperative . . . open voltage divider section between B plus end and screen tap. Replace with 10 watt 10,000 ohm unit.

**ZENITH 7**

Intermittent reception . . . look for faulty voice coil. The clearance of the coil is very small and care must be used when replacing.

**ZENITH 9S262**

Whistles when volume control is advanced . . . replace 12 mfd electrolytic across high voltage divider tap.

**ZENITH 9S307**

Distortion similar to avc blocking. . . . Look for open output filter condenser.

**ZENITH 9S365**

Howling off resonance . . . look for defective .05 mfd condenser in a.v.c. circuit; replace with 400 volt unit.

**ZENITH 12A57, 12A57-58**

Too deep over all tone control positions. . . . Remove .01 mfd C10 and much better tone will result.

**ZENITH 12L57, 12L58**

Intermittent . . . replace C29, a .05 mfd condenser coupling 6H6 to volume control (R7).

**ZENITH 12U158-159**

Distortion at low volume . . . replace 1 watt 400 ohm cathode resistor on 6F6 with 5 watt wire-wound unit. Check cathode bypass condenser for leakage.

No reception on lowest wave band . . . untwist grid lead wires from screw on gang condenser. Realign, using .0001 mfd. mica condenser from oscillator to antenna.

Weak reception, high noise level . . . check r.f. alignment, also fixed condenser grouped around volume control

**ZENITH 15U269**

To reduce the number of complaints on the split-dial mechanisms be sure to carefully lubricate all bearings and tighten all set-screws; especially the two that hold the lever on the wave band switch. If these work loose, the entire dial assembly will jam.

**ZENITH 33X.** Reception faint, audio ok . . . Look under chassis near the antenna compensating coil (movable). Here you will find a 2,000 ohm resistance from ground to coil. It is often open. It may usually be simply left out. Tone raspy . . . Change over 171 to 112 tube.

**ZENITH 35-P, 40-P.** Noisy reception . . . Look for high resistance ground on secondary of original a.f. transformer. Green corrosion is frequently found under the terminal lugs. Ohmmeter tests rarely show up this grief.

**ZENITH 41, 42, 422**

Noisy, fading . . . check local-distance switch for poor internal contact. This connects to a .00025 mfd condenser in the antenna circuit.

**ZENITH 50 SERIES.** Loud hum, all parts and tubes checking ok . . . Connect 250,000 ohm resistor from grid to grid of push-pull second audio tubes.

**ZENITH 50 SERIES.** Pronounced hum not due to trouble in filter . . . Apparently due to pickup of hum inductively from the filter choke by the a.f. transformer between the first and final a.f. stages. It will be found that first a.f. stage plate is fed through .1 meg. resistor, a.f. passing from this plate through a blocking condenser to the audio transformer primary, the low end of which is connected to the cathode. Remove the blocking condenser and shunt the transformer primary with a .1 megohm resistor. Connect the low end of this resistor to ground through a 2 mike by-pass. Now feed plate voltage to the low end of the transformer primary, through an additional .1 megohm resistor. The connection from the B plus transformer terminal to cathode is, of course, removed.

# RADIO RETAILING'S "Service Shortcuts"

**ZENITH 50 Series.** To simulate a.v.c. . . . In re-setting the automatic tuning levers first throw the antenna trimming control to the extreme left and leave it there. Tune the weakest station of the selection as sharply as possible and set the volume control until the volume is barely audible, about one or two db. Leave the volume control alone from then on. In setting each of the other stations, detune them so that the volume is the same as it was on the weakest station and lock the lever at this point. In this way, as each lever is pressed all stations come in with equal volume, the volume equalizing being done by the lever automatically detuning the correct amount. Do not try this on supers of a later series as serious distortion will result. In the tuned r.f. sets the selectivity is not so great as to cause appreciable distortion.

**ZENITH 50**

Loud hum, all parts and tubes check O.K. . . . Connect a .25 meg. resistor between grids of second audio stage.

**ZENITH 50, 52.** Loss of sensitivity at one end of dial. Remove can from condenser gang, remove screws holding stators in place at each end, place lockwasher under these, and tighten. When screws loosen re-aligning only unbalances set at other end of dial.

**ZENITH 50, 60, 70.** Persistent hum. By-pass detector cathode to ground with 1 or two mfd. condenser, supplementing the one already in the circuit.

**ZENITH 52**

Loud hum which increases as set operates . . . replace 36 mfd wet filter condenser with a wet or dry unit.

**ZENITH 52**

Noisy at intervals . . . replace bleeder resistor, apply small amount of vaseline to volume control.

**ZENITH 52**

Hum . . . replace 500,000 ohm resistor across secondary of pushpull input transformer.

**ZENITH 55-127, 55-150**

Fading after a few minutes operation . . . . replace 6A8G cathode resistor. This is a 400 ohm unit.

**ZENITH 55-127, 55-150**

After a few minutes of operation all signals but locals fade completely. Replace the 6A8G cathode resistor. This is mounted directly on the tube socket near the front of the chassis. Replace with 400 ohm ½ watt resistor.

**ZENITH 70.** Intermittent reduction in volume accompanied by sharp click and ragged tone. Replace first audio plate blocking condenser with 300 volt, .5 mfd. paper type.

**ZENITH 70.** Fading or intermittent reception. Look for open or shorted .25 mfd. dual plate by-pass condenser located on the first and second r.f. stages, or .03 mfd. by-pass condenser located between the plate of the first a.f. tube and the primary of the first a.f. transformer. If signals vary from weak to normal suspect the first. If they are always weak check the second.

**ZENITH 70.** Volume dies down after set is in operation for a few seconds, requiring readjustment of volume control. Replace detector (white) plate resistor. Correspondents report other troubles traceable to resistors, some replacing all 10.

**ZENITH 70.** Where trouble is experienced in cutting down the volume of loud locals connect the unused "off" position lug of the r.f. gain control resistor (not the antenna resistor section) to one of the 27 first audio grids. This provides antenna, r.f. and a.f. volume control.

**ZENITH P-71**

Dead . . . . shorted filter section on either side of choke coil. Cut shorted lead, connect 8 mfd electrolytic with *negative* side to choke; positive lead goes to connector strip.

**ZENITH 91, 92**

Poor bass response and low sensitivity . . . look for open .5 mfd (part 22–113) in the cathode of the second detector.

**ZENITH 91, 92**

Inoperative until 24A a.v.c. is removed . . . open a.v.c. voltage divides connect 15,000 ohm 1 watt wire wound resistor across that section which is between cathode and screen grid tops.

**ZENITH 134F**

Noisy, weak . . . check both i.f. transformers with low range ohmmeter. If more than 10 ohms, replace transformer.

**ZENITH 420**

Motorboats . . . check .0005 mfd plate bypass on 56 second detector for open.

**ZENITH 420**

Rapid motorboating, no reception . . . . open 500 mmf. condenser across plate and cathode of the 56 second detector.

**ZENITH 666**

Noise when car is in motion which disappears when set heats up . . . look for broken stranded lead between the mixer grid cap and condenser gang. As the tubes heat, this brings the connection more firmly together.

**ZENITH 705**

Broad, insensitive . . . remove cathode resistor and bypass on 2A7 mixer. Ground cathode, then repeak I.F. and R.F. stages.

**ZENITH 715, 755, 756**

Frying noise at low volume levels . . . If this condition still exists when the antenna is removed and the antenna post grounded replace the 55 second detector and a.v.c. tube. In some cases the same tube causes a peculiar popping noise which is often attributed to local disturbances.

**ZENITH 730 SERIES**

Intermittent or inoperative . . . shorted I.F. bypass from primary to secondary or shorted I.F. winding. Also to improve performance remove fine stranded enameled wires of I.F. coils where they pass through eyelets at base of coil form and run externally through spaghetti, sharpening I.F. resonance peak due to reduced coupling, realign. I.F. frequency is .485 K.C.

**ZENITH 750.** Set inoperative, i.f. tube grids heat red hot . . . Look for shorted i.f. transformer. This is caused very often by the leads of one winding touching those of the other side of the winding.

**ZENITH 755**

Fades out after few minutes of operation . . . defective heavy duty resistor connected from filter condenser to push-pull transformer.

**ZENITH 755.** Oscillator fails to operate below 850 kc. . . . Antenna coil frequently absorbs moisture and should be rewound or replaced, carefully doped with good coil dope to avoid repetition of trouble.

**ZENITH 760.**

Hum, after regular values of filter condensers have been installed . . . May be reduced by bypassing the .5 bypass condenser next to primary of input transformer with 8 mike electrolytic. Distortion . . . Bypass center-tap of volume control to ground with .00015 mica unit. This removes the r.f. load on the grid of the first a.f. tube and allows greater a.f. amplification.

**ZENITH 870**

Dead below 700 kc. . . . check for shorted or leaky .01 mfd 400 volt condenser in the oscillator plate circuit.

**ZENITH 880.**

Distortion and avc blocking . . . Shorted .0004 condenser, part 22-285 in first r.f. coil can.

**ZENITH 1205, 1503**

Improper action of volume control . . . suspect 6J5 audio tube.

Poor radiorgan action is often caused by defective 6F8G.

**ZENITH 1502**

Wont log . . . loose Parker-Kalon screws in gang hub gear.

**ZENITH 5528**

Dead or weak on automatic tuning . . . check C2, a 50 mmf. condenser for open (part No. 22–289)

**ZENITH 5647**

Blown ballast tube . . . before replacing tube check C9, a 40 mfd condenser connected to cathode of 25Z6. If defective, replace.

**ZENITH 5659**

Excessive regeneration . . . move grid lead of 12A8G away from oscillator section of gang condenser.

**ZENITH 5704**

Oscillation . . . disconnect 6K7 first audio from mutual bias system. Insert 3500 ohm ½ watt resistor bypassed with 25 mfd condenser in cathode circuit. Connect grid return to chassis.

**ZENITH 5714**

Whistles at medium volume, noisy between signals . . . Open filter condenser; loose connection or open condenser across r.f. choke.

**ZENITH 5714**

Inoperative on automatic tuning . . . open compensating coil (part No 20–196, No. 3 in diagram)

**ZENITH 5714**

Automatic tuning dead or noisy . . . dirt on contacts or warped contact strip shorting to ground; also, look for shorted compensating condenser.

**ZENITH 5724, 5725**

Noisy on automatic tuning . . . washer on latch bar of pushbutton assembly grounding; poor contact on band switch.

Signals cut out above 1400 kc. . . . 5 megacycle trimmer screwed in too tight.

Oscillation . . . open screen bypass; grid lead of 6K7 near a.v.c. lug or plate lead of 6A8; wave trap open or improperly adjusted.

**ZENITH 5801, 1004**

Reduced volume, shadowmeter does not function . . . shorted .05 mfd bypass on r.f. input side of 6C5 shadowmeter grid.

**ZENITH 5808, 1005, 1103**

Oscillation at 550 kc. . . . improper adjustment of wave trap; realign trap.

Noisy tuning . . . grounding braid on gang rubs on flywheel; burrs on drive shaft shorting to volume control: dial pulley rubbing against dial.

**ZENITH 5902**

Oscillation or audio howl. . . . ground the 56 detector cathode right at the socket, remove original black ground wire. Reroute the second i.f. plate wire from the lug around the 8 mfd condenser and connect to the other side of the choke.

**ZENITH 5907 AND 1207**

Distortion, sounds very much like blocking a.v.c. action . . . look for open filter condenser section.

**ZENITH 75232**

Audio oscillation when volume is advanced . . . check C19 a 12 mfd condenser for open.

**ZENITH '37**

Scratchy noise on tuning flywheel models . . . flywheel not making proper ground at end of shaft. Tighten spring at end of shaft by moving pulley towards center; oil.

**ZENITH 1937 6 AND 8 TUBE MODELS**

Low sensitivity and volume, broad tuning . . . increased resistance in primary windings of i.f. transformers. Resistance varies from the normal 6 ohm to as high as 90 or 3000 ohms. Replace all i.f. transformers for permanent repair.

**ZENITH 1937 MODELS**

On the 8, 10 and 12 tube model 1937 Zenith sets, difficulty is sometimes encountered getting optimum tracking over all bands. Generally the B band is the one giving the most trouble, and as this is the key band around which all the fundamental calibrations of the other bands are obtained, its importance in the alignment procedure is obvious.

The fault lies in the shifting of the inductance in the tapped first detector coil. The consequent mismatching of the inductive-capacitive design results in the shifting of the peak resonant condition for optimum alignment of the circuit. In other words, due to the poor matching of inductances as a result of this shift, a resonance peak could not be obtained in the R.F. tuned circuits.

However, the remedy for this is rather easily obtained. It has been found that shifting the small fixed mica condenser marked C1 in the diagram, ordinarily connected in the grid circuit of the antenna coil secondary, over to the first detector coil circuit in the identical position, the matching of the coils becomes closer and a consequent improvement in sensitivity is obtained. The capacity of this condenser is 5 mmfds.

The tension of the drive belt for the motor can be adjusted by loosening the two hexagon bolts found at the rear of the chassis and holding the motor assembly. The motor assembly should be moved in the elongated holes until the drive belt has a snug tension but not too tight an action. Then retighten the hexagon mounting bolts.

If the drive mechanism has a tendency to slip when using the large manual knob check for a loose spring clutch. All adjustments to the clutch should be made very carefully. The mechanism being essentially the same as in 1937. Adjustments are made by turning the screw mounted through the blue steel clutch spring found at the front of the brass drive shaft mechanism. By running the screw in, the action will be tightened, and by running the screw out, the action will be loosened, but in all cases only one or two complete turns should be necessary.

All bearings, dial mechanism and gears of the gang should be lubricated approximately once a year. If at any time it is necessary to change the electric eye tube, care should be taken not to place the tube too far forward as this will cause a strain to be placed on the dial pan causing friction at the center hub of the gang shaft and the motor assembly will not operate freely.

**ZENITH 1937 MODELS**

Electric tuning service adjustments:

Make sure that nothing is obstructing the free action of either the belt, the pulley, or the drive shaft, such as wires or component parts.

Check the band change shaft for clearance on the 9-12-15 tube models. The die cast bracket through which the brass drive shaft for the motor travels can be centered properly by loosening the two Parker-Kalon screws which hold the bracket to the front of the dial assembly. After centering the above mentioned die cast bracket retighten the two Parker-Kalon screws.

Check the $\frac{9}{16}$ nut at the rear of chassis in this manner; loosen the nut, permit the motor to run and retighten the $\frac{9}{16}$ nut while in operation. This will allow the front and rear bearings to align themselves properly.

Check for ample clearance between the dial gang drive pulley and the mounting nut for the bearing through the front of the chassis approximately $\frac{1}{32}$" clearance. Brass drive shaft should also have ample clearance at rear of chassis between collar mounted on motor switch.

The large drive pulley mounted on the rear of the brass shaft should be in line with the small pulley which will be found mounted on the motor armature. Alignment can be accomplished by loosening the two set screws and sliding the large pulley either backward or forward on the brass shaft.

### ZENITH 1937 MODELS

Strong motor-boating with switch in distance position . . . replace screen grid and plate bypass condensers marked C 4 in schematic.

### ZENITHS 1938

Noisy tuning on short wave band . . . remove dirt and grease insulating the condenser drive shaft from ground. This can be accomplished by removing condenser and switch shaft and cleaning with carbon tetrachloride. Also clean shaft bearing.

In the 5 tube a.c. models a common trouble is no reception below 1200 kc. This is due to an open primary in the oscillator coil. Shunt this winding with a 10,000 ohm resistor and circuit returns to normal.

In 15 tube models, distortion at low volume is sometimes encountered. This is due to a small amount of r.f. getting through to the audio system. To remedy: insert a .0005 mmf condenser in series with a 150,000 ohm resistor from first audio grid to ground.

Battery Sets. In receivers of this type using a 1A6 or 1C6 pentagrid converter it is common that this tube refuses to oscillate or has short life. A simple remedy is to drop the screen voltage by inserting a 50,000 ohm resistor in series with the screen. A .1 mfd condenser should then be connected from screen to ground. Care should be used to see that the resistor is not placed in a circuit that will drop the screen voltage on all tubes.

### ZENITH 1940 MODELS

Noisy operation of automatic tuning may be caused by the leads to the automatic assembly or coils laying against metal frame of assembly.

Care should be taken that leads from the tone control condenser and all other leads in the 6 tube bakelite models be kept away from the 6Q7 tube, otherwise the tone will be affected.

Cutting out in portable receivers will usually be due to poor connections at the battery pack plugs. Slight bending of the prongs will correct this.

### ZENITH BATTERY SETS

Hash . . . Loose cover on power pack. Hash on automatic tuning . . . automatic tuning touching power pack. Insulate at point of contact.

### ZENITH FORD AUTO RADIO

Dead, tubes do not heat, switch must be snapped several times to start . . . . replace volume control and switch. The trouble is in the switch only, but the control is usually worn also. Use a D.P.S.T. switch for longer life. Connect the poles in parallel.

### ZENITH CHASSIS 5709

Dead on broadcast band, alright on short waves . . . 10 mmf. condenser shorted in antenna transformer. This is part #22-601, C21 in diagram.

### ZENITH AUTOMATIC SETS

Some automatic buttons, especially those for the low frequency range, will not tune in a station above 700 K.C. . . . This is apparently due to the iron core of the permeability coil not going far enough into the coil due to insufficient threading of the adjusting screw. However, it is easily taken care of by adding a very small amount of capacity to the compensating condenser, marked C9 in the diagram, part No. 22–738. This brings up the frequency range of the automatic coils to any range desired, but since it is only a matter of a couple of hundred K.C., a very small capacity is required, not more than 50 mmfd. Simply twisting two insulated No. 18 wires about 6 inches long around each other and connecting one end of each wire across the compensating condenser, will give one the correct capacity. Untwisting or twisting more or less of the wires will give sufficient change in capacity to get the range just right.

Noisy automatic buttons. . . . This is due either to poor contact of the spring contacts which is actuated by the button itself, or to the key bar in the switch, which slips out of position. In the first case, that of poor contact; simply clean the spring switches with carbon tetrachloride, and if necessary, bend them over so that they make better contact. In the second case, that of the key bar slipping out of position, the best thing to do is to drop a bit of solder on each end of the bar, where it goes through the guiding slots, which will prevent it shooting out of the slot and losing its position.

### ZENITH MIDGETS

Due to the small baffle area, lack of bass is apparent. To increase bass response the following notes apply.

On model 5R312 add an .02 mfd condenser across the .02 mfd coupling condenser already in the circuit. Also, a .01 600 volt across the .002 connected between plate and B plus of the power output tube.

In the 6D312 model, add a .01 condenser across the .002 in the circuit. Also, a .02 across the .02 already connected from plate to ground.

In both of the above models, in order that the speaker fits closer to the cabinet, replace the 3 hexagon speaker screws with flat head screws.

A common complaint in the 6D311 and 6D312 models is poor tone and loss of volume after playing a while. This is usually due to a defective 25L6 output tube.

When these models are dead yet all components check okeh and set lights, check the two 50 ohm resistors connected from the switch to ground.

To determine if the a.v.c. of a receiver is working, try grounding the grid return of the first i.f. secondary. If sensitivity does not increase, look for defect in this circuit.

### ZENITH PORTABLES

When the a.c.-d.c.-battery portables work on the battery but are dead on the line, check the 117Z6G tube first. If this checks O.K. then look for an open resistor next to the cathode of the 117Z6G which feeds the filaments of the other tubes. The filaments of these tubes are all in series and get their filament voltage from the rectified plate voltage of the rectifier tube. The resistor is in series with the filaments and frequently opens up, being only of 1 watt capacity.

When set operates weakly and everything else checks O.K. change the speaker. The permanent magnet on these sets seems to deteriorate rather rapidly and produces the above effect.

Another thing to look for with weak reception is a moist loop cable. The covering of the loop cable is made of some material which readily absorbs moisture, causing high radio leakage. Later models of this set have changed the covering.

When sets work O.K. on the line but are dead on battery, look for poor switch contact at the back of the plug receptacle on chassis. The regular electric plug has to be plugged into this receptacle on back of set before it will work on the batteries.

### ZENITH RADIORGAN

No control of tone . . . insulation on 33,000 ohm resistor cut through, shorting to cathode lug.

Too much tone control on some buttons, none on others . . . tone condenser or switch leads shorted.

Tone changes with different settings of volume control . . . defective volume control or shorted terminal, either of tone switch or volume control. Poor volume control contacts or shorted taps.

Noisy when tuning . . . dirty condenser gang wipers or plates; flywheel touching band switch lug; volume control or drive shaft not making good contact to ground.

Volume control has two peaks and distorts at low volume . . . isolate 6F5 grid circuit from i.f. plate leads. (Later sets have this lead shielded.)

# COMMON TROUBLES, STAGE-BY-STAGE

(Compiled from *Radio Retailing's* "Tricks of the Trade" File)

| SYMPTOMS | | | | |
|---|---|---|---|---|
| Inoperative | Oscillator plate resistor open<br>First I. F. transformer primary open<br>Shorting, or open oscillator trimmer<br>Open plate choke | Plate load resistor open or shorted<br>Shorted trimmer condenser<br>Control grid lead shorting to shield<br>Open plate filter choke | Shorted electrolytic condenser<br>Filter choke open<br>Open voltage divider<br>Shorted or open power transformer secondary | Open voice coil<br>Secondary of output transformer open<br>Voice coil leads open<br>Voice coil leads shorted to pole piece |
| Intermittent Fading | Poor insulation on oscillator trimmer<br>Open grid return resistor<br>High resistance at lugs of oscillator coil<br>Dirty band switch contacts | Defective volume control<br>Load resistor bypass shorting<br>High resistance in I. F. secondary<br>R. F. bypass condenser shorting | Shorted or leaky filter condenser<br>Loose contacts on voltage divider<br>Defective line switch<br>Filter choke shorting to ground | Voice coil lugs making poor contact<br>Metal filings grounding voice coil<br>Secondary of output transformer opening<br>Field coil connections making poor contact |
| Oscillation Noisy | Open grid coil<br>Cathode bypass open or leaky<br>Shield on grid leads corroded or open<br>Decoupling resistor shorted | Open plate or grid bypass<br>Defective volume control<br>Out of alignment<br>Defective plate load resistor | Open filter condenser<br>Defective voltage divider<br>Filter choke leaking to ground<br>Leaky bypass from rectifier to ground | Metal filings grounding voice coil<br>Warped cone<br>Voice coil rubbing on pole piece<br>Voice coil winding loose |
| Distortion Hum | Leaky plate bypass condenser<br>Shorted or leaky cathode bypass<br>Open grid filter condenser<br>Oscillator misaligned | Defective volume control<br>Leaky audio coupling resistor<br>Plate load resistor too high<br>Leaky plate bypass condenser | Open or shorted primary bypass condenser<br>Centertap on filament windings open<br>Open or leaky output filter condenser<br>Grounded pilot light bracket | Field coil open or shorting<br>Hum bucking coil shorted or reversed<br>Voice coil rubbing on pole piece<br>Unfiltered field supply |

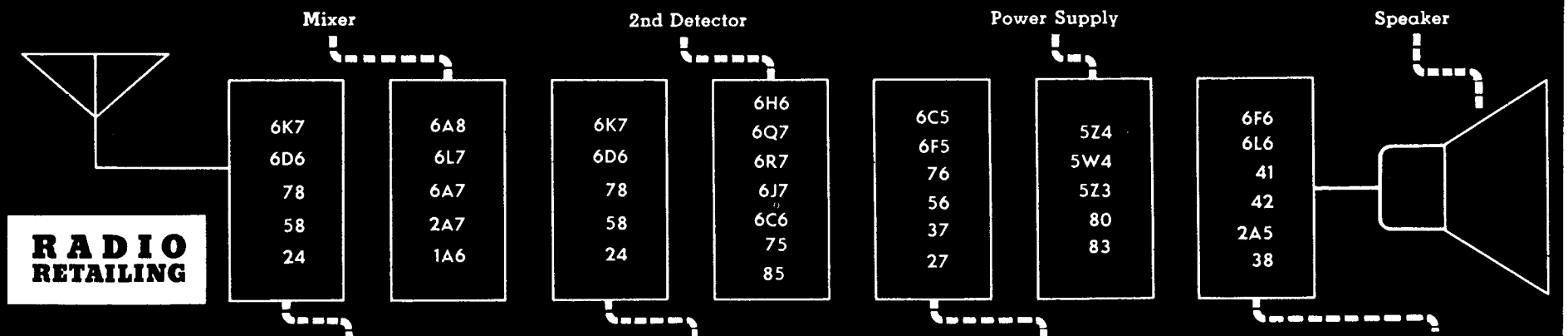


| SYMPTOMS | R.F. | I. F. | 1st Audio | Output |
|---|---|---|---|---|
| Inoperative | Open or shorted R.F. coil<br>Band switch contacts dirty<br>Shorted tuning or trimmer condenser<br>Open plate decoupling resistor or choke | Open I. F. coil<br>Plate decoupling resistor open<br>Shorted trimmer condenser<br>Primary and secondary bypass shorted | Plate load resistor open<br>Open audio coupling condenser<br>Shorted plate load bypass<br>Open cathode resistor | Primary of output transformer open<br>Open cathode bias resistor<br>Shorted audio coupling condenser<br>Secondary of output transformer shorted or open |
| Intermittent Fading | Shorting trimmer condenser<br>Loose connecting lugs on R.F. coil<br>Leaky plate or screen bypass<br>Band switch making poor contact | Open or shorting grid bypass<br>Litz wire on lugs corroded<br>Trimmer condenser shorting<br>A.V.C. network defective | Defective audio transformer primary<br>Open volume control<br>Leaky grid or plate coupling condenser<br>Defective plate load resistor | Defective primary on output transformer<br>Open cathode bias resistor<br>Shorting audio coupling condenser<br>Open secondary on input transformer |
| Oscillation Noisy | Rotor contacts on tuning condenser dirty<br>Open cathode or screen bypass<br>Shorted bias resistor<br>Aligned too sharply | Screen bypass open<br>I. F. out of alignment<br>Shorted cathode bias resistor<br>Poor coil contacts at lugs | Shorted cathode bypass<br>Plate decoupling resistor shorted<br>Open plate bypass condenser<br>Primary of coupling transformer opening | Open cathode bypass condenser<br>Defective cathode resistor<br>Leaky audio coupling condenser<br>High resistance from primary to secondary |
| Distortion Hum | Shorted filament bypass<br>Antenna too long, causing overload<br>Shielding making poor contact<br>Shorted antenna coupling condenser | Open cathode bypass<br>Stage out of alignment<br>Too sharply tuned, oscillation<br>High resistance between primary and secondary of I. F. transformer | Shorted grid or plate coupling condenser<br>Cathode bypass shorted<br>Audio transformer open or shorting<br>High resistance from primary to secondary of audio transformer | Shorted cathode bypass<br>Screen grid circuit open<br>Shorted turns on output transformer<br>If pushpull, tubes are unbalanced |

# HOW MUCH ELECTRICITY?

SMALL AC-DC MIDGET
(4-5 tubes)

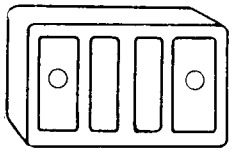

Average drain 55 Watts
Average Cost 2/10-cent per hour

SMALL AC MIDGET
(4-6 tubes)

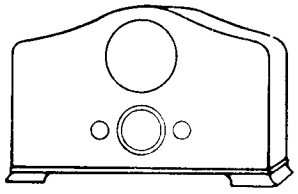

Average drain 65 Watts
Average Cost 3/10-cent per hour

SMALL AC CONSOLE
(5-9 tubes)

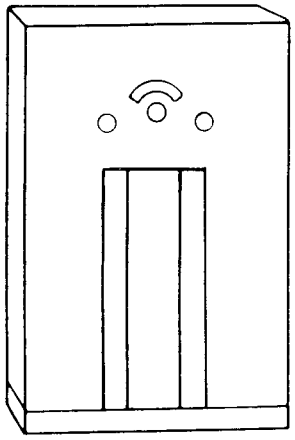

Average drain 95 Watts
Average Cost 5/10-cent per hour

LARGE AC TABLE MODEL
(6-8 tubes)

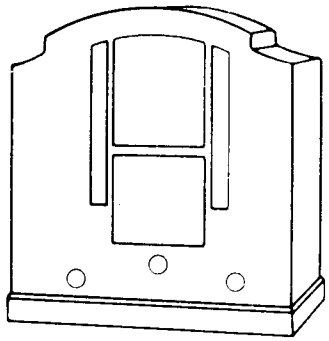

Average drain 85 Watts
Average Cost 4/10-cent per hour

LARGE AC CONSOLE
(9-16 tubes)

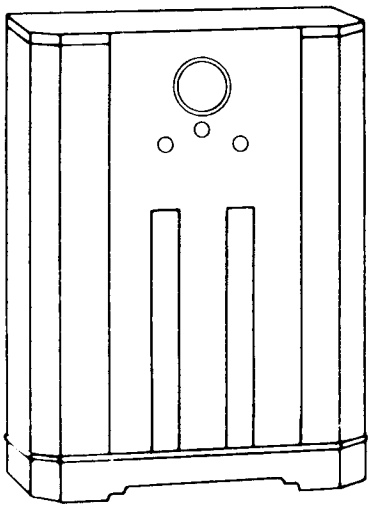

Average drain 115 Watts
Average Cost 6/10-cent per hour

COMPARISON OF APPLIANCES

| Appliance | Est. Annual Use (kw. hrs.) | Average Annual Bill |
|---|---|---|
| Cleaner | 36 | $ 1.91 |
| Clock | 18 | .95 |
| Heater | 50 | 2.65 |
| Iron | 50 | 2.65 |
| Ironer | 125 | 6.62 |
| Oil Burner | 240 | 12.72 |
| Percolator | 50 | 2.65 |
| RADIO | 75 | 3.97 |
| Range | 1750 | 44.75 |
| Refrigerator | 550 | 22.00 |
| Toaster | 50 | 2.65 |
| Washer | 24 | 1.27 |
| Water Heater | 3000 | 60.00 |

—E.E.I.

**SALES AMMUNITION from Radio Retailing**

# WHY THE NAME BEHIND THESE PRODUCTS

## *Is Important to You*

You can use or sell the products backed by the Utah trademark with full assurance that they will give satisfactory performance. Competent designing, which keeps pace with *all* industry developments; careful engineering, which provides maximum efficiency; and precision manufacturing, which affords maximum economy; have won preference and acceptance throughout the radio and sound equipment industries.

Service men, dealers, jobbers and manufacturers selected 5,963,621 Utah transformers, vibrators, Carter parts and speakers during the last year alone. You, too, can benefit by insisting on these products which for over 18 years have been recognized for their uniformity and high quality. They can help you meet your requirements successfully and profitably.

Utah products are distributed nationally—by recognized jobbers only. Look for the Utah trademark on the part or carton.

**UTAH RADIO PRODUCTS COMPANY,** ***810 Orleans St., Chicago, Ill.***

***Canadian Office: 560 King Street West, Toronto. Cable Address: UTARADIO, CHICAGO***

*If you don't have a copy of the latest Utah catalog ask your jobber for one—or write us direct.*

utah

## UTAH TRANSFORMERS

are standard equipment in millions of receivers, all over the world. And there is a *complete* line of Utah replacement transformers.

***"Do you know why I've standardized on Utah Transformers?"***

"I certainly do. They have a non-corrosive, protective film of cellulose acetate which provides absolute insulation—prevents breaking down even under extremely high humidity and severe atmospheric conditions. They're fully guaranteed. And the high safety factor of their insulation is proved by the extra hours of satisfactory performance they give."

SEE THE UTAH CATALOG FOR DETAILS

## UTAH VIBRATORS'

outstanding design and advanced engineering have maintained their leadership.

***"Do you know the demand for Utah Vibrators increased 63% last year?"***

"Sure, there are 5 main reasons: 1. Complete exact replacements can be made with the Utah line — 2. Absolute dependability is assured by Utah's rugged, time-proved construction—3. Finest materials available are used in the manufacture of Utah Vibrators. 4. 'Life Tested' in Utah's laboratory—the industry's best equipped—5. They have a 12 months' guarantee."

FOR DETAILS SEE THE UTAH CATALOG

## UTAH-CARTER PARTS,

including vitreous enamel resistors, volume controls, potentiometers, rheostats, plugs, "T" and "L" pads, long and short jacks, imp jacks, jack switches, push-button switches, plug-in type D.C. relays.

***"Do you know why I always insist on Utah-Carter parts?"***

"That's easy. You've found they save time and money. Experience has taught you that satisfactory performance is assured at every Utah-point in the circuit."

DETAILS ARE IN THE UTAH CATALOG

## UTAH SPEAKERS—

ninety-three different models to meet practically every radio receiver and sound equipment requirement.

***"How many Utah Speakers were used by the radio and sound equipment industries last year?"***

"1,676,622—the preference for Utah Speakers is continuing to rise rapidly. They have a balanced line; and ruggedness and adequate power handling capacity are built-in characteristics."

COMPLETE FACTS IN UTAH CATALOG